Table of Contents

VPRO Turbine Protection Board 2
- VPRO Emergency Turbine Protection 2
  - Functional Description 2
  - Installation 5
  - Operation 5
    - Speed Control and Overspeed Protection 5
    - Speed Difference Detection 6
    - Interface To Trip Solenoids 6
    - Backup Synch Check Protection 6
    - Thermocouple and Analog Inputs 6
    - Power Supply 7
    - Control of Trip Solenoids 7
    - Solenoid Trip Tests 7
  - Specifications 9
  - Diagnostics 10
  - Configuration 10
  - Alarms 15

Mr. Lucian

Sales manager

Wechat

Joyoung International Trading Co., Ltd

Whatsapp/Wechat: +86 18106906650
Email: Lily@htechplc.com
Mobile: +86 18106906650
Website: www.xm-dcs.com
Address: Room 1503, Building B, Diamond Coast,
No. 96 Lujiang Road, Siming District, Xiamen Fujian

VPRO Turbine Protection Board

VPRO Emergency Turbine Protection

Functional Description

The Emergency Turbine Protection (VPRO) board and associated terminal boards (TPRO and TREG) provide an independent emergency overspeed protection system. The protection system consists of triple redundant VPRO boards in a module separate from the turbine control system, controlling the trip solenoids through TREG. The figures shows the cabling to VPRO from the TPRO and TREG terminal boards.

Note VPRO also has an Ethernet connection for IONet communications with the control modules.

The VPRO board in the Protection Module <P> provides the emergency trip function. Up to three trip solenoids can be connected between the TREG and TRPG terminal boards. TREG provides the positive side of the 125 V dc to the solenoids and TRPG provides the negative side. Either board can trip the turbine. VPRO provides emergency overspeed protection and the emergency stop functions. It controls the 12 relays on TREG, nine of which form three groups of three to vote inputs controlling the three trip solenoids.

The original VPROH1A has been superseded by the functionally equivalent VPROH1B. VPROH1A and VPROH1B supports a second TREG board driven from VPRO connector J4. VPROH2B is a lower power version of VPRO that omits support for the second TREG board. Applications using a second TREG board connected to J4 must use VPROH1A or VPROH1B, not VPROH2B.

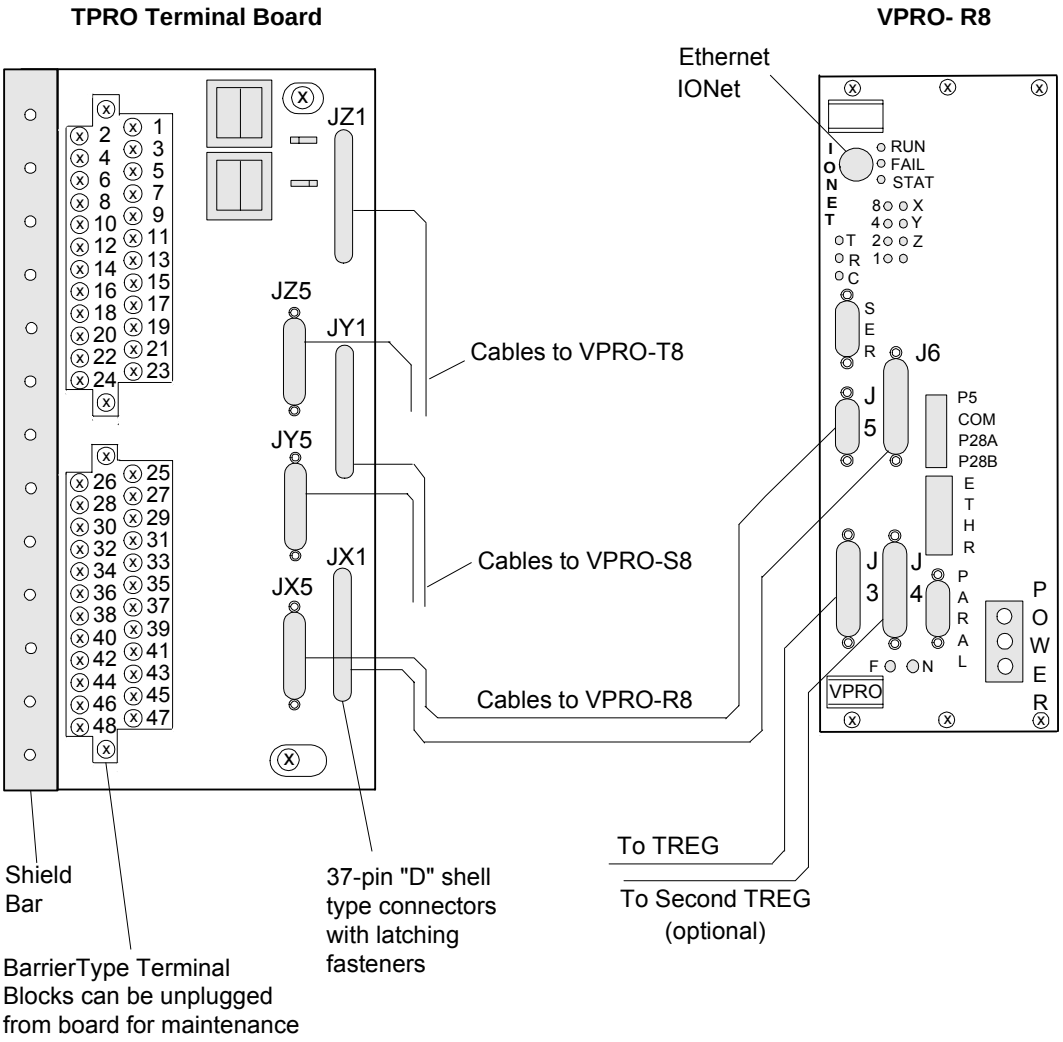

VPRO Board, TPRO Terminal Board, and Cabling

The figure shows how the VTUR and VPRO processor boards share in the turbine protection scheme. Either one can independently trip the turbine using the relays on TRPG or TREG.

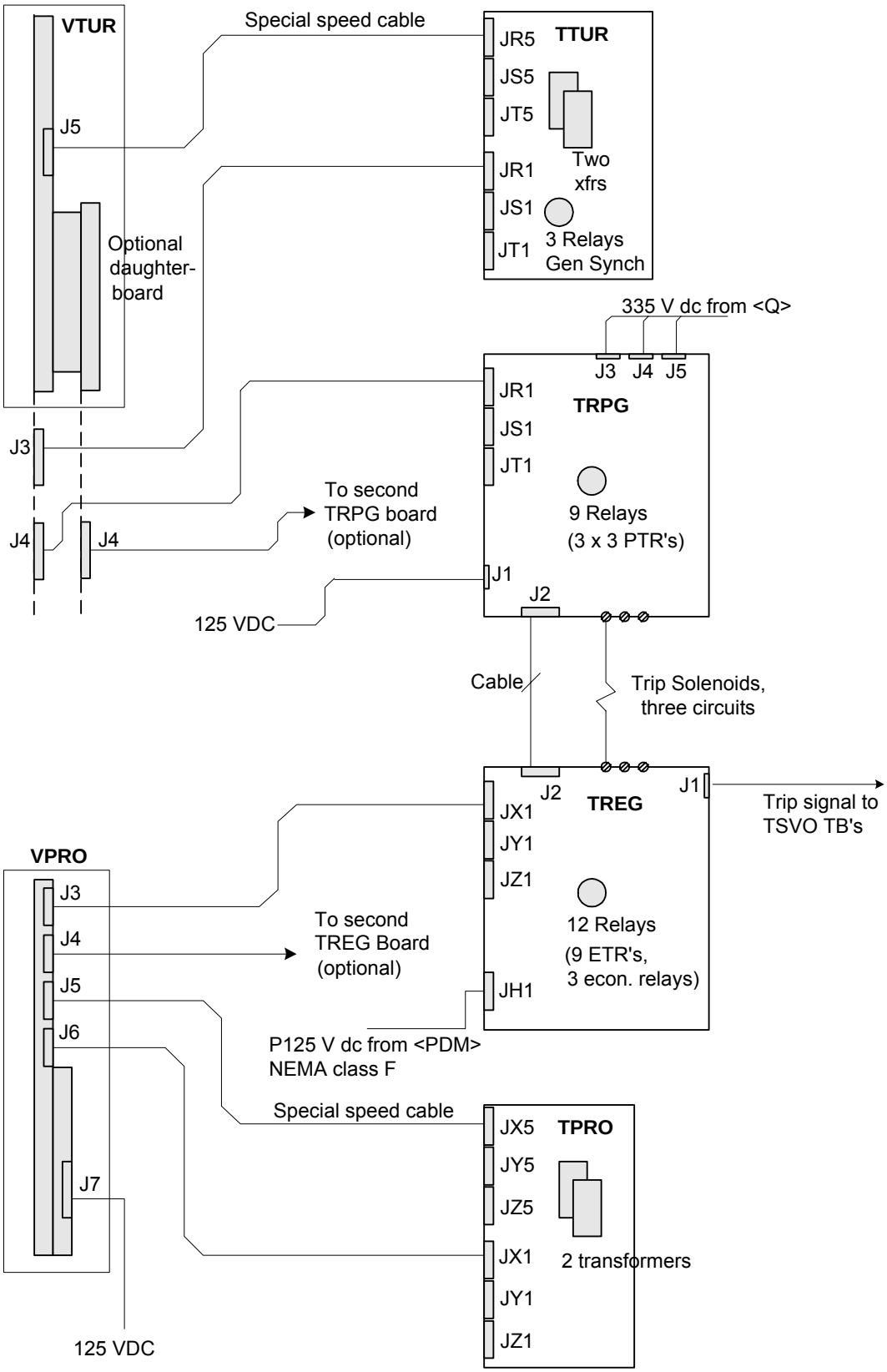

Turbine Control and Protection Boards

Installation

➢ **To install the V-type board**

1. Power down the VME I/O processor rack
2. Slide in the board and push the top and bottom levers in with your hands to seat its edge connectors
3. Tighten the captive screws at the top and bottom of the front panel
4. Power up the VME rack and check the diagnostic lights at the top of the front panel

Note Cable connections to the terminal boards are made at the J3, J4, J5, and J6 connectors on VPRO front panel. These are latching type connectors to secure the cables. Connector J7 is for 125 V dc power. For details refer to the section on diagnostics in this document.

It may be necessary to update the VPRO firmware to the latest level. For instructions, refer to *GEH-6403 Control System Toolbox for a Mark VI Turbine Controller*.

Operation

The main purpose of the protection module is emergency overspeed (EOS) protection for the turbine, using three VPRO boards. In addition, VPRO has backup synchronization check protection, three analog current inputs, and nine thermocouple inputs, primarily intended for exhaust over-temperature protection on gas turbines.

The protection module is always triple redundant with three completely separate and independent VPRO boards named R8, S8, and T8 (originally named X, Y, and Z). Any one of these boards can be powered down and replaced while the turbine is running without jeopardizing the protection system. Each board contains its own I/O interface, processor, power supply, and Ethernet communications (IONet) to the controller. The communications allow initiation of test commands from the controller to the protection module and the monitoring of EOS system diagnostics in the controller and on the operator interface. Communications are resident on the VPRO board. The VPRO board has a VME interface that allows programming and testing in a VME rack. However, the backplane is neutralized when plugged into the protection module to eliminate any continuity between the three independent sections.

Speed Control and Overspeed Protection

Speed control and overspeed protection is implemented with six passive, magnetic speed pickups. The first three are monitored by the controllers, which use the median signal for speed control and primary overspeed protection. The second three are separately connected to the R8, S8, and T8 VPROs in the protection module. Provision is made for nine passive magnetic speed pickups or active pulse rate transducers (TTL type) on the TPRO terminal board with three being monitored by each of the R8, S8, and T8 VPROs. Separate overspeed trip settings are programmed into the application software for the primary and emergency overspeed trip limits, and a second emergency overspeed trip limit must be programmed into the I/O configurator to confirm the emergency overspeed (EOS) trip point.

The speed is calculated by counting passing teeth on the wheel and measuring the time involved. Another protection feature is: after the turbine reaches a predetermined steady-state speed, the rate of change of speed is continuously calculated and compared with 100%/sec and transmitted to the controller to trip the unit if it is detected. This steady-state speed limit is a tuning constant located in the controller's application software. Another speed threshold which is monitored by the EOS system, is 10% speed. This is transmitted to the controller to verify that there is no gross disagreement between the first set of three speed pickups being monitored by the controller (for speed control and the primary overspeed protection) and the second set of three speed pickups being monitored by the EOS system.

Speed Difference Detection

There should never be a reason why the speed calculated by PPRO is significantly different from the speed calculated by the main control. Speed difference detection looks at the difference in magnitude between pulse rate 1 from both PPRO and the main control. If the difference is greater than the set threshold for three successive samples, a SpeedDifTrip is latched. If the main control recovers for 60 seconds, the trip is removed. This allows the main control to recover with subsequent re-arming of the backup protection.

Interface To Trip Solenoids

The trip system combines the Primary Trip Interface from the controller with the EOS Trip Interface from the protection module. Three separate, triple redundant trip solenoids (also called Electrical Trip Devices - ETDs) are used to interface with the hydraulics. The ETDs are connected between the TRPG and TREG terminal boards. A separately fused 125 V dc feeder is provided from the turbine control for each solenoid, which is energized in the run mode and de-energized in the trip mode.

Backup Synch Check Protection

Backup synch check protection is provided in the Protection Module. The generator and bus voltages are supplied from two, single phase, potential transformers (PTs) secondary output supplying a nominal 115 V rms. The maximum cable length between the PTs and the turbine control is 100 meters of 18 AWG twisted, shielded wire. Each PT is magnetically isolated with a 1,500 V rms rated barrier and a circuit load less than 3 VA. The synch algorithms are based on phase lock loop techniques. Phase error between the generator and bus voltages is less than +/-1 degree at nominal voltage and 50/60 Hz. A frequency range of 45 to 66 Hz is supported with the measured frequency within 0.05% of the input frequency. The algorithm is illustrated under TTUR, generator synchronizing.

Each PT input is internally connected in parallel to the R8, S8, and T8 VPROs. The triple redundant phase slip windows result in a voted logical output on the TREG terminal board, which drives the K25A relay. This relay's contacts are connected in series with the synch permissive relay (K25P) and the auto synch relay (K25) to insure that no false command is issued to close the generator breaker. Similarly, contacts from the K25A contact are connected in series with the contacts from remote, manual synchronizing equipment to insure no false commands.

Thermocouple and Analog Inputs

Thermocouple and analog inputs are available in the VPRO, primarily for gas turbine applications. Nine thermocouple inputs are monitored with three connected to each VPRO. These are generally used for backup exhaust over-temperature protection. Also, one ±5, 10 V dc, 4-20 mA (selectable) input, and two 4-20 mA inputs can be connected to the TPRO terminal board, which feeds the inputs in parallel to the three VPROs.

Power Supply

Each VPRO board has its own on-board power supply. This generates 5 V dc and 28 V dc using 125 V dc supplied from the cabinet PDM. The entire protection module therefore has three power supplies for high reliability

TREG is entirely controlled by VPRO, and the only connections to the control modules are the J2 power cable and the trip solenoids. In simplex systems a third cable carries a trip signal from J1 to the TSVO terminal board, providing a servo valve clamp function upon turbine trip.

Control of Trip Solenoids

Note The solenoid circuit has a metal oxide varistor (MOV) for current suppression and a 10 Ω, 70 W economizing resistor.

Both TRPG and TREG control the trip solenoids so that either one can remove power and actuate the hydraulics to close the steam or fuel valves. The three trip solenoids are supplied with 125 V dc through plug J2, and draw up to 1 A with a 0.1 second L/R time constant. The nine trip relay coils on TREG are supplied with 28 V dc from VPRO boards in R8, S8, and T8.

A separately fused 125 V dc feeder is provided for the solenoids, which energize in the run mode and de-energize in the trip mode. Diagnostics monitor each 125 V dc feeder from the power distribution module at its point of entry on the terminal board to verify the fuse integrity and the cable connection.

Solenoid Trip Tests

Application software in the controller is used to initiate tests of the trip solenoids. Online tests allow each of the trip solenoids to be manually tripped one at a time either through the PTR relays from the controller or through the ETR relays from the protection module. A contact from each solenoid circuit is wired back as a contact input to give a positive indication that the solenoid has tripped. Primary and emergency offline overspeed tests are provided too for verification of actual trips due to software simulated trip overspeed conditions.

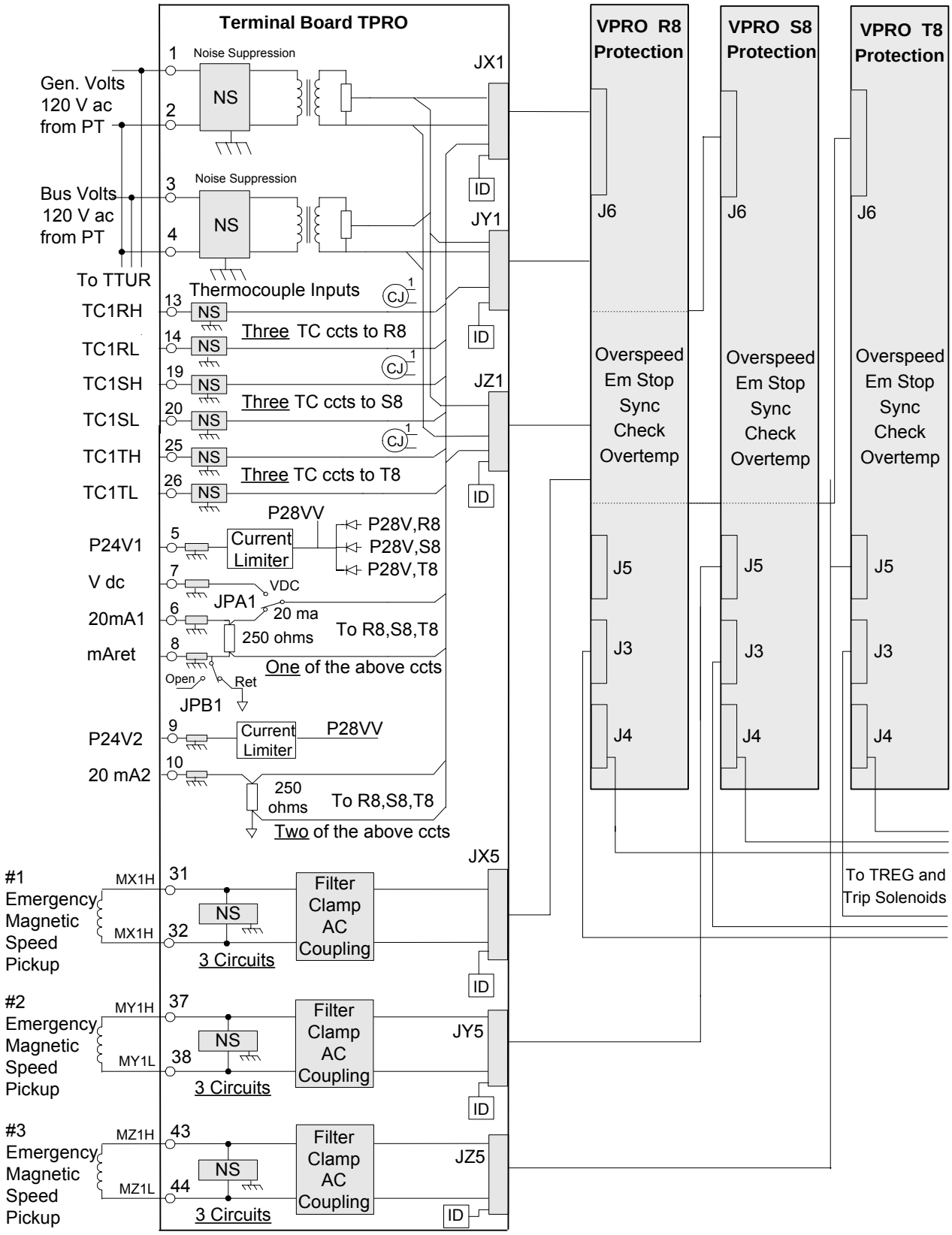

TMR VPROs and TPRO Terminal Board

Specifications

Item	Specification
Number of Inputs	3 Passive speed pickups 1 Generator and 1 Bus Voltage 3 Thermocouples1 4-20 mA current or voltage 2 4-20 mA current 7 Trip interlocks 2 Emergency Stop
Number of Outputs	6 Trip Solenoids 6 Economizer relays 1 Breaker relay command, K25A on TTUR 1 Servo clamp relay contact, to TSVO boards
Power Supply Voltage	Input supply 125 V dc (70-145 V dc) Output 5 V dc and 28 V dc
Frame Rate	Up to 100 Hz
MPU Characteristics	Output resistance 200 Ω with inductance of 85 mH.Output generates 150 V p-p into 60 K Ω at the TPRO terminal block, with insufficient energy for a spark. The maximum short circuit current is approximately 100 mA. The system applies up to 400 Ω normal mode load to the input signal to reduce the voltage at the terminals.
MPU Cable	Sensors can be up to 300 m (984 ft) from the cabinet, assuming that shielded pair cable is used, with typical 70 nF single ended or 35 nF differential capacitance, and 15 Ω resistance.
MPU Pulse Rate Range	2 Hz to 20 kHz
MPU Pulse Rate Accuracy	0.05% of reading; resolution is 15 bits at 100 Hz Noise of the acceleration measurement is less than ±50 Hz/sec for a 10,000 Hz signal being read at 10 ms.
MPU Input Circuit Sensitivity	Minimum signal is 27 mV pk at 2 Hz Minimum signal is 450 mV pk at 14 kHz
Generator and Bus Voltage Sensors	Two Single-Phase Potential Transformers, 115 V rms secondary voltage accuracy is 0.5% of rated Volts rms Frequency Accuracy 0.05% Phase Difference Measurement better than 1 degree. Allowable voltage range for synchronizing is 75 to 130 V rms. Each input has a load of less than 3 VA.
Thermocouple Inputs	Same specifications as for VTCC board
Analog Inputs	2 current inputs, 4-20 mA 1 current input, with selection of 4-20 mA, or ±5 V dc, or ±10 V dc. Same specifications as for VAIC board

Diagnostics

Three LEDs at the top of the VPRO front panel provide status information. The normal RUN condition is a flashing green, FAIL is a solid red. The third LED is STATUS and is normally off but shows a steady orange if a diagnostic alarm condition exists in the board. VPRO makes diagnostic checks and creates faults as follows:

- Trip relay driver and contact feedbacks
- Solenoid voltage and solenoid voltage source
- Economizer relay driver and contact feedbacks
- K25A relay driver and coil
- Servo clamp relay driver and contact feedback
- High and low limits on all analog inputs
- If any one of the above signals goes unhealthy, a composite diagnostic alarm L3DIAG_VPROR, or S, or T occurs. The diagnostic signals can be individually latched and then reset with the RESET_DIA signal if they go healthy.

Terminal board connectors on TPRO and TREG have their own ID device that is interrogated by the I/O board. The ID device is a read-only chip coded with the terminal board serial number, board type, revision number, and plug location. When the chip is read by VPRO and a mismatch is encountered, a hardware incompatibility fault is created.

Configuration

Parameter	Description	Choices
Configuration		
Turbine_Type	Define the type of turbine from selection of ten types	Two gas turbine, two LM, two large steam, one medium steam, one small steam, two stag GT
LMTripZEnable	On LM machine, when no PR on Z, enable vote for trip	Enable, disable
OT_Trip_Enbl	Enable overtemperature trip	Enable, disable
OvrTemp_Trip	Iso-thermal overtemperature trip setting for exhaust thermocouples in degree F	-60 to 2,000
TA_Trip_Enab1	Steam, enable trip anticipation on ETR1 (same for four ETRs)	Enable, disable
ContWdogEn	Enable trip on loss of control outputs to VPRO	Enable. disable
SpeedDifEn	Enable trip on speed difference between controller & VPRO	Enable. disable
StaleSpdEn	Enable trip on speed from controller freezing	Enable, disable
DiagSolPwrA	For TREL/TRES, sol power, BusA, diagnostic (same for three solenoids)	Enable, disable
RatedRPM_TA	Steam, rated RPM, used for trip anticipation calc	0 to 20,000
AccelCalType	Select acceleration calculation type	Slow, medium, fast
Auto Reset	Automatic restoring of thermocouples removed from scan	Enable, disable
OTBias_RampP	Overtemperature bias ramp positive	
OTBias_RampN	Overtemperature bias ramp negative	
Min_MA_Input	Minimum MA for healthy 4/20 ma Input	0 to 21
Max_MA_Input	Maximum MA for healthy 4/20 ma Input	0 to 21
OTBias_Dflt	Overtemperature bias	

Parameter	Description	Choices
OS_Diff	Absolute speed difference, in percent, for trip threshold (if SpeedDifEn enabled)	0 to 10
5J6:IS200TPRO		
PulseRate1	First of three speed inputs - card point	point edit (input FLOAT)
PRType	Selects gearing (resolution)	Unused, PR<6,000 Hz, PR>6,000 Hz
PRScale	Pulses per revolution (output RPM)	0 to 1,000
OS_Setpoint	Overspeed trip setpoint in RPM	0 to 20,000
OS_Tst_Delta	Offline overspeed test setpoint delta in RPM	-2,000 to 2,000
Zero_Speed	Zero speed for this shaft in RPM	0 to 20,000
Min_Speed	Minimum speed for this shaft in RPM	0 to 20,000
Accel_Trip	Enable acceleration trip	Enable, disable
Acc_Setpoint	Accelerate trip setpoint in RPM/second	0 to 20,000
TMR_DiffLimt	Difference limit for voted pulse rate inputs in engineering units	0 to 20,000
BusPT_KVolts	Kilo-Volts RMS, bus potential transformer - card point	Point edit (input FLOAT)
PT_Input	PT input in kilovolts rms for PT_Output	0 to 1,000
PT_Output	PT output in volts rms for PT_Input typically 115	60 to 150
TMR_DiffLimt	Difference limit for voted PT inputs in percent	0 to 100
GenPT_KVolts	Kilo-Volts RMS, generator PT, configuration similar to Bus PT-card point	Point edit (input FLOAT)
TC1R	Thermocouple 1, for R module (first of R, S, and T) - card point	Point edit (input FLOAT)
ThermCplType	Select thermocouple type or mV input	Unused, mV, T, K, J, E
Low Pass Filter	Enable 2 Hz low pass filter	Enable, disable
TC2R	Thermocouple 2, for R module (first of R, S, and T) config as above - card point	Point edit (Input FLOAT)
TC3R	Thermocouple 3, for R module (first of R, S, and T) config as above - card point	Point edit (Input FLOAT)
Cold Junction	Cold junction for thermocouples 1-3	Point edit (Input FLOAT)
TMR_DiffLimt	Difference limit for voted TMR cold junction inputs in Deg F	-60 to 2,000
AnalogIn1	First of three analog inputs - card point	Point Edit (Input FLOAT)
Input Type	Type of analog input	Unused, 4-20 mA, ±10 V
Low_Input	Input mA at low value	-10 to 20
Low_Value	Input value in engineering units at low value	-3.402e +38 to 3.402e +38
High_Input	Input mA at high value	-10 to 20
High_Value	Input value in engineering units at high mA	-3.402e +38 to 3.402e +38
InputFilter	Filter bandwidth in Hz	Unused, 12 Hz, 6 Hz, 3Hz, 1.5 Hz, 0.75 Hz
Trip_Enable	Enable trip for this mA input	Enable, Disable
DiagHighEnab	Enable high input limit diag	Enable, Disable
DiagLowEnab	Enable low input limit diag	Enable, disable
TripSetpoint	Trip setpoint in engineering units	-3.402e +38 to 3.402e +38
TripTimeDelay	Time delay before tripping turbine after signal exceeds setpoint in seconds	0 to 10
TMR_DiffLimt	Difference limit for voted TMR inputs in per cent of (High_Value-Low_Value)	0 to 100
J3:IS200TREG	First TREG board	Connected, not connected
KESTOP1_Fdbk1	Emergency Stop ESTOP1, inverse sense, K4 relay, True=Run - card point	Point edit (input BIT)
DiagVoteEnab	Enable voting disagreement diagnostic	Enable, disable
Contact1	Trip interlock 1 (first of 7) - card point	Point edit (Input BIT)

Parameter	Description	Choices
ContactInput	Trip interlock 1 used	Used, unused
SeqOfEvents	Record contact transitions in sequence of events	Enable, disable
DiagVoteEnab	Enable voting disagreement diagnostic	Enable. disable
TrpTimeDelay	Time delay before tripping turbine after contact opens (sec)	0 to 10
TripMode	Trip mode	Direct, conditional, disable
K1_Fdbk	Trip relay 1 feedback (first of 3) - card point	Point edit (Input BIT)
RelayOutput	Relay feedback used	Used, unused
DiagVoteEnab	Enable voting disagreement diagnostic	Enable, disable
DiagSolEnab	Enable solenoid voltage diagnostic	Enable, disable
KE1_Fdbk	Economizer relay for trip solenoid feedbk (first of 3) - card point	Point edit (Input BIT)
RelayOutput	Economizer relay feedback used	Used, unused
DiagVoteEnab	Enable voting disagreement diagnostic	Enable, disable
K4CL_Fdbk	Drive control valve servos closed, use only for steam turbine simplex - card Point	Point edit (Input BIT)
Relay Output	Servo valve clamp used	Used, unused
DiagVoteEnab	Enable voting disagreement diagnostic	Enable, disable
K25A_Fdbk	Synchronizing check relay on TTUR - card point	Point edit (Input BIT)
SynchCheck	Synch check relay K25A used	Used, unused
DiagVoteEnab	Enable voting disagreement diagnostic	Enable, disable
SystemFreq	System frequency in Hz	50 or 60
ReferFreq	Select generator frequency reference for PLL, standard PR input or from signal space	PR Std or Sg space
TurbRPM	Rated load turbine RPM	0 to 20,000
VoltageDiff	Maximum voltage difference in kV rms for synchronizing	0 to1,000
FreqDiff	Maximum frequency difference in Hz for synchronizing	0 to 0.5
PhaseDiff	Maximum phase difference in degrees for synchronizing	0 to 30
GenVoltage	Minimum generator voltage in kV rms for synchronizing	1 to 1,000
BusVoltage	Minimum bus voltage in kV rms for synchronizing	1 to 1,000
J4A:IS200TREG	Second TREG board	Connected, not con.
KESTOP2_Fdbk	Emergency stop ESTOP2, inverse sense, K4 relay, True= run - card point	Point edit (Input BIT)
K4_Fdbk	Trip relay 4 feedback (first of 4,5,6) - card point	Point edit (Input BIT)
KE4_Fdbk	Economizing relay for trip solenoid 4 (first of 4,5,6) - card point	Point edit (Input BIT)

Card Points(Signals)	Description–Point Edit (Enter Signal Connection)	Direction	Type
L3DIAG-VPROR	Card Diagnostic	Input	BIT
L3DIAG-VPROS	Card Diagnostic	Input	BIT
L3DIAG-VPROT	Card Diagnostic	Input	BIT
PR1_Zero	L14HP_ZE	Input	BIT
PR2_Zero	L14IP_ZE	Input	BIT
PR3_Zero	L14LP_ZE	Input	BIT
K1_FdbkNVR	Non voted L4ETR1_FB, Trip Relay 1 Feedback R	Input	BIT
K1_FdbkNVS	Non voted L4ETS1_FB, Trip Relay 1 Feedback S	Input	BIT
K1_FdbkNVT	Non voted L4ETT1_FB, Trip Relay 1 Feedback T	Input	BIT
:	:	:	
K6_FdbkNVR	Non voted L4ETR6_FB, Trip Relay 6 Feedback R	Input	BIT
K6_FdbkNVS	Non voted L4ETS6_FB, Trip Relay 6 Feedback S	Input	BIT
K6_FdbkNVT	Non voted L4ETT6_FB, Trip Relay 6 Feedback T	Input	BIT

Card Points(Signals)	Description–Point Edit (Enter Signal Connection)	Direction	Type
OS1_Trip	L12HP_TP	Input	BIT
OS2_Trip	L12IP_TP	Input	BIT
OS3_Trip	L12LP_TP	Input	BIT
Dec1_Trip	L12HP_DEC	Input	BIT
Dec2_Trip	L12IP_DEC	Input	BIT
Dec3_Trip	L12LP_DEC	Input	BIT
Acc1_Trip	L12HP_ACC	Input	BIT
Acc2_Trip	L12IP_ACC	Input	BIT
Acc3_Trip	L12LP_ACC	Input	BIT
TA_Trip	Trip Anticipate Trip L12TA_TP	Input	BIT
TA_StpLoss	L30TA	Input	BIT
OT_Trip	L26TRP	Input	BIT
MA1_Trip	L3MA_TRP1	Input	BIT
MA2_Trip	L3MA_TRP2	Input	BIT
MA3_Trip	L3MA_TRP3	Input	BIT
SOL1_Vfdbk	When TREG used, Trip Solenoid 1 Voltage detected status	Input	BIT
:	:	Input	BIT
SOL6_Vfdbk	When TREG used, Trip Solenoid 6 Voltage detected status	Input	BIT
L25A_Cmd	L25A Breaker Close Pulse	Input	BIT

The following Input BITs marked config are set by Configuration

Card Points(Signals)	Description–Point Edit (Enter Signal Connection)	Direction	Type
Cont1_TrEnab	Config_Contact 1 Trip Enabled	Input	BIT
:	:	Input	BIT
Cont7_TrEnab	Config -contact 7 trip enabled	Input	BIT
Acc1_TrEnab	Config- accel 1 trip enabled	Input	BIT
Acc2_TrEnab	Config- accel 2 trip enabled	Input	BIT
Acc3_TrEnab	Config- accel 3 trip enabled	Input	BIT
OT_TrEnab	Config – overtemp trip enabled	Input	BIT
GT_1Shaft	Config – gas turb, 1 shaft enabled	Input	BIT
GT_2Shaft	Config – gas turb, 2 shaft enabled	Input	BIT
LM_2Shaft	Config – LM turb, 2 shaft enabled	Input	BIT
LM_3Shaft	Config – LM turb, 3 shaft enabled	Input	BIT
LargeSteam	Config – Large steam 1, enabled	Input	BIT
MediumSteam	Config – medium steam, enabled	Input	BIT
SmallSteam	Config – small steam, enabled	Input	BIT
STag_GT_1S	Config - stag 1 shaft, enabled	Input	BIT
STag_GT_2S	Config - stag 2 shaft, enabled	Input	BIT
ETR1_Enab	Config - ETR1 relay enabled	Input	BIT
:	:	:	
ETR6_Enab	Config - ETR6 relay enabled	Input	BIT
KE1_Enab	Config - economizing relay 1 enabled	Input	BIT
KE2_Enab	Config - economizing relay 2 enabled	Input	BIT
KE3_Enab	Config - economizing relay 3 enabled	Input	BIT
KE4_Enab	Config - economizing relay 4 enabled	Input	BIT
KE5_Enab	Config - economizing relay 5 enabled	Input	BIT
KE6_Enab	Config - economizing relay 6 enabled	Input	BIT
K4CL_Enab	Config - servo clamp relay enabled	Input	BIT
K25A_Enab	Config - sync check relay enabled	Input	BIT

Card Points(Signals)	Description–Point Edit (Enter Signal Connection)	Direction	Type
L5CFG1_Trip	HP config Trip	Input	BIT
L5CFG2_Trip	IP config Trip	Input	BIT
L5CFG3_Trip	LP config Trip	Input	BIT
OS1_SP_CfgEr	HP overspeed setpoint config mismatch error	Input	BIT
OS2_SP_CfgEr	IP overspeed setpoint config mismatch error	Input	BIT
OS3_SP_CfgEr	LP overspeed setpoint config mismatch error	Input	BIT
ComposTrip1	Composite trip 1	Input	BIT
ComposTrip2	Composite trip 2	Input	BIT
ComposTrip3	Composite trip 3	Input	BIT
L5ESTOP1	ESTOP1 trip, TREG, J3	Input	BIT
L5ESTOP2	ESTOP2 trip, TREG, J4	Input	BIT
L5Cont1_Trip	Contact1 trip	Input	BIT
:	:	Input	BIT
L5Cont7_Trip	Contact7 trip	Input	BIT
LPShaftLock	LP shaft locked	Input	BIT
Inhbt1_Fdbk	Trip inhibit signal feedback for contact 1	Input	BIT
:	:	:	
Inhbt7_Fdbk	Trip inhibit signal feedback for contact 7	Input	BIT
L3SS_Comm	Valid communications with VCMI status	Input	BIT
Trip1_EnCon	Contact1 trip enabled conditional	Input	BIT
:	:	Input	BIT
Trip7_EnCon	Contact7 trip enabled conditional	Input	BIT
BusFreq	Bus frequency SFL 2 Hz	Input	FLOAT
GenFreq	Gen frequency SF 2 Hz	Input	FLOAT
GenVoltsDiff	Gen - bus kV difference rms: gen low is negative	Input	FLOAT
GenFreqDiff	Gen - bus slip Hz: gen slow is negative	Input	FLOAT
GenPhaseDiff	Gen - bus phase difference degrees: gen lag is negative	Input	FLOAT
PR1_Accel	HP accel in RPM/SEC	Input	FLOAT
PR2_Accel	IP accel in RPM/SEC	Input	FLOAT
PR3_Accel	LP accel in RPM/SEC	Input	FLOAT
PR1_Max	HP max speed since last zero speed in RPM (see Vol 1 Chap 8 overspeed protection)	Input	FLOAT
PR2_Max	IP max speed since last zero speed in RPM	Input	FLOAT
PR3_Max	LP max speed since last zero speed in RPM	Input	FLOAT
OTSPBias	Overtemperature setpoint bias	Input	FLOAT
OTSetpoint	Overtemperature setpoint	Input	FLOAT
SynCk_Perm	L25A_PERM – sync check permissive	Output	BIT
SynCk_ByPass	L25A_BYPASS – sync check bypass	Output	BIT
Cross_Trip	L4Z_XTRP – control cross trip	Output	BIT
OnLineOS1Tst	L97HP_TST1 – on line HP overspeed test	Output	BIT
OnLineOS2Tst	L97LP_TST1 – on line HP overspeed test	Output	BIT
OnLineOS3Tst	L97IP_TST1 – on line LP overspeed test	Output	BIT
OffLineOS1Tst	L97HP_TST2 – offline HP overspeed test	Output	BIT
OffLineOS2Tst	L97LP_TST2 – offline IP overspeed test	Output	BIT
OffLineOS3Tst	L97IP_TST2 – offline LP overspeed test	Output	BIT
TrpAntcptTst	L97A_TST – trip anticipate test	Output	BIT
LokdRotorByp	L97LR_BYP – locked rotor bypass	Output	BIT
HPZeroSpdByp	L97ZSC_BYP – HP zero speed check bypass	Output	BIT

Card Points(Signals)	Description–Point Edit (Enter Signal Connection)	Direction	Type
TestETR1	L97ETR1 – ETR1 test, true denergizes relay	Output	BIT
:	:	:	
TestETR4	L97ETR4 – ETR4 Test, true denergizes relay	Output	BIT
PTR1	L20PTR1 – primary trip relay CMD for diagnostic only	Output	BIT
:	:	:	
PTR6	L20PTR6 – primary trip relay CMD for diagnostic only	Output	BIT
PR_Max_Rst	Max speed reset (see Vol 1 Chap 8 overspeed protection)	Output	BIT
OnLineOS1X	L43EOST_ONL – online HP overspeed test with auto reset	Output	BIT
Trip1 Inhbt	Contact1 trip inhibit	Output	BIT
:	:	:	
Trip7 Inhbt	Contact7 trip inhibit	Output	BIT
CJBackup	Estimated TC cold junction temperature in Deg F	Output	FLOAT
OS1_Setpoint	HP overspeed setpoint in RPM	Output	FLOAT
OS2_Setpoint	IP overspeed setpoint in RPM	Output	FLOAT
OS3_Setpoint	LP overspeed setpoint in RPM	Output	FLOAT
OS1_TATrpSp	PR1 overspeed trip setpoint in RPM for trip anticipate Fn	Output	FLOAT
OTBias	Overtemperature bias signal	Output	FLOAT
DriveFreq	Drive (Gen) Freq (Hz), used for non standard drive config.	Output	FLOAT
Speed1	Shaft speed 1 in RPM	Output	FLOAT
ContWdog	Controller watchdog counter	Output	LONG INT

Alarms

Fault	Fault Description	Possible Cause
2	Flash memory CRC failure	Board firmware programming error (board will not go online)
3	CRC failure override is active	Board firmware programming error (board is allowed to go online)
4-15	Reserved for future use	
16	System limit checking is disabled	System checking was disabled by configuration.
17	Board ID failure	Failed ID chip on the VME I/O board
18	J3 ID failure	Failed ID chip on connector J3, or cable problem
19	J4 ID failure	Failed ID chip on connector J4, or cable problem
20	J5 ID failure	Failed ID chip on connector J5, or cable problem
21	J6 ID failure	Failed ID chip on connector J6, or cable problem
22	J3A ID failure	Failed ID chip on connector J3A, or cable problem
23	J4A ID failure	Failed ID chip on connector J4A, or cable problem
24	Firmware/Hardware incompatibility	Invalid terminal board connected to VME I/O board
25-29	Reserved for future use	
30	ConfigCompatCode mismatch; firmware: #; Tre: # The configuration compatibility code that the firmware is expecting is different than what is in the tre file for this board	A tre file has been installed that is incompatible with the firmware on the I/O board. Either the tre file or firmware must change. Contact the factory.
31	IOCompatCode mismatch; firmware: #; Tre: # The I/O compatibility code that the firmware is expecting is different than what is in the tre file for this board	A tre file has been installed that is incompatible with the firmware on the I/O board. Either the tre file or firmware must change. Contact the factory.
32-38	Contact input # not responding to test mode trip interlock number # is not reliable	Contact input circuit failure on VPRO or TREG/TREL/TRES board.
39-40	Contact excitation voltage test failure contact excitation voltage has failed, trip interlock monitoring voltage is lost	Loss of P125 voltage caused by disconnection of JH1 to TREG/TREL/TRES, or disconnect of JX1, JY1, JZ1 on TREG/TREL/TRES to J3 on VPRO.

Fault	Fault Description	Possible Cause
41-43	Thermocouple ## raw counts high. The ## thermocouple input to the analog to digital converter exceeded the converter limits and will be removed from scan	A condition such as stray voltage or noise caused the input to exceed +63 mV.
44-46	Thermocouple ## raw counts low. The ## thermocouple input to the analog to digital converter exceeded the converter limits and will be removed from scan	The board detected a thermocouple open and applied a bias to the circuit driving it to a large negative number, or the TC is not connected, or a condition such as stray voltage or noise caused the input to exceed -63 mV.
47	Cold junction raw counts high. Cold junction device input to the A/D converter has exceeded the limits of the converter. Normally two cold junction inputs are averaged; if one is detected as bad then the other is used. If both cold junctions fail, a predetermined value is used	The cold junction device on the terminal board has failed.
48	Cold junction raw counts low. Cold junction device input to the A/D converter has exceeded the limits of the converter	The cold junction device on the terminal board has failed.
49	Calibration reference # raw counts high. Calibration reference # input to the A/D converter exceeded the converter limits. If Cal. Ref. 1, all even numbered TC inputs will be wrong; if Cal. Ref. 2, all odd numbered TC inputs will be wrong	The precision reference voltage on the board has failed.
50	Calibration reference raw counts low. Calibration reference input to the A/D converter exceeded the converter limits	The precision reference voltage on the board has failed.
51	Null reference raw counts high. The null (zero) reference input to the A/D converter has exceeded the converter limits	The null reference voltage signal on the board has failed.
52	Null reference raw counts low. The null (zero) reference input to the A/D converter has exceeded the converter limits	The null reference voltage signal on the board has failed.
53-55	Thermocouple ## linearization table high. The thermo-couple input has exceeded the range of the linearization (lookup) table for this type. The temperature will be set to the table's maximum value	The thermocouple has been configured as the wrong type, or a stray voltage has biased the TC outside of its normal range, or the cold junction compensation is wrong.
56-58	Thermocouple ## linearization table low. The thermo - couple input has exceeded the range of the linearization (lookup) table for this type. The temperature will be set to the table's minimum value	The thermocouple has been configured as the wrong type, or a stray voltage has biased the TC outside of its normal range, or the cold junction compensation is wrong.
59-61	Analog Input # unhealthy. The number # analog input to the A/D converter has exceeded the converter limits	The input has exceeded 4-20 mA range, or for input #1 if jumpered for ±10 V, it has exceeded ±10 V range, or the 250 Ω burden resistor on TPRO has failed.
63	P15=####.## volts is outside of limits. The P15 power supply is out of the specified +12.75 to +17.25 V operating limits	Analog ±15 V power supply on VPRO board has failed.
64	N15=####.## volts is outside of Limits. The N15 power supply is out of the specified –17.25 to –12.75 V operating limits	Analog ±15 V power supply on VPRO board has failed.
65-66	Reserved for future use	
67	P28A=####.## Volts is Outside of Limits. The P28A power supply is out of the specified 23.8 to 31.0 V operating limits	The P28A power supply on VPWR board has failed, otherwise there may be a bad connection at J9, the VPWR to VPRO interconnect.
68	P28B=####.## Volts is Outside of Limits. The P28B power supply is out of the specified 23.8 to 31.0 V operating limits	The P28B power supply on VPWR board has failed, otherwise there may be a bad connection at J9, the VPWR to VPRO interconnect.
69-82	Relay driver feedback does not match the requested state. The state of the command to the relay does not match the state of the relay driver feedback signal; the relay cannot be reliably driven until corrected	The relay driver or relay driver feedback monitor on the TREG/TREL/TRES terminal board has failed, or the cabling between VPRO and TREG/TREL/TRES is incorrect.

Fault	Fault Description	Possible Cause
69-71	Trip Relay (ETR) Driver # Mismatch requested State. Terminal Board 1	See 69-82 above
72-74	Econ Relay Driver # Mismatch Requested State. Terminal Board 1	See 69-82 above
75	Servo Clamp Relay Driver Mismatch (K4CL) Requested State.	See 69-82 above
76	K25A Relay (Synch Check) Driver Mismatch Requested State.	See 69-82 above
77-79	Trip Relay (ETR) Driver # Mismatch requested State. Terminal Board 2	See 69-82 above
80-82	Econ Relay Driver # Mismatch Requested State. Terminal Board 2	See 69-82 above
83-96	Relay contact feedback does not match the requested state. The state of the command to the relay does not match the state of the relay contact feedback signal; the relay cannot be reliably driven until corrected	The relay contact or relay contact feedback monitor on the TREG/TREL/TRES terminal board has failed, or the cabling between VPRO and TREG/TREL/TRES is incorrect.
83-85	Trip Relay (ETR) Contact # Mismatch requested State. Terminal Board 1	See 83-96 above
86-88	Econ Relay Contact # Mismatch Requested State. Terminal Board 1	See 83-96 above
89	Servo Clamp Relay Driver Mismatch (K4CL) Requested State. Terminal Board 1	See 83-96 above
90	K25A Relay (Synch Check) Contact MismatchRequested State. Terminal Board 1	The K25A relay contact feedback on the TREG/TREL/TRES board has failed, or the K25A relay on TTUR has failed, or the cabling between VPRO and TTUR is incorrect. The state of the command to the K25A relay does not match the state of the K25A relay contact feedback signal; cannot reliably drive the K25A relay until the problem is corrected. The signal path is from VPRO to TREG/TREL/TRES to TRPG/TRPL/TRPS to VTUR to TTUR.
91-93	Trip Relay (ETR) Contact # Mismatch Requested State. Terminal Board 2	See 83-96 above
94-96	Econ Relay Contact # Mismatch Requested State. Terminal Board 2	See 83-96 above
97	TREG/TREL/TRES J3 Solenoid Power Source is Missing. The P125 V dc source for driving the trip solenoids is not detected; cannot reliably drive the trip solenoids	The power detection monitor on the TREG1/TREL1/TRES1 board has failed, or there is a loss of P125 V dc through the J2 connector from TRPG/TRPL/TRPS board, or the cabling between VPRO and TREG1/TREL1/TRES1 or between TREG1/TREL1/TRES1 and TRPG/TRPL/TRPS is incorrect.
98	TREG/TREL/TRES J4 Solenoid Power Source is Missing. The P125 V dc source for driving the trip solenoids is not detected; cannot reliably drive the trip solenoids K4-K6	The power detection monitor on the TREG2/TREL2/TRES2 board has failed, or there is a loss of P125 V dc through the J2 connector from TRPG/TRPL/TRPS board, or the cabling between VPRO and TREG2/TREL2/TRES2 or between TREG2/TREL2/TRES2 and TRPG/TRPS/TRPL is incorrect. Also trip relays K4-K6 may be configured when there is no TREG2/TREL2/TRES2 board.
99-104	TREG/TREL/TRES Solenoid Voltage # Mismatch Requested State. The state of the trip solenoid # does not match the command logic of the voted ETR # on TREG/TREL/TRES, and the voted primary trip relay (PTR) # on TRPG/TRPL/TRPS, the ETR cannot be reliably driven until corrected	The trip solenoid # voltage monitor on TREG/TREL/TRES has failed or ETR # driver failed, or PTR # driver failed. There may be a loss of 125 V dc through the J2 connector from TRPG/TRPL/TRPS, which has a separate diagnostic. See (105-107)
105	TREL/TRES, J3, Solenoid Power, Bus A, Absent. The voltage source for driving the solenoids is not detected on Bus A; cannot reliably drive these solenoids	Loss of power bus A through J2 connector from TRPL/TRPS
106	TREL/TRES, J3, Solenoid Power, Bus B, Absent. The voltage source for driving the solenoids is not detected on Bus B; cannot reliably drive these solenoids	Loss of power bus B through J2 connector from TRPL/TRPS

Fault	Fault Description	Possible Cause
107	TREL/TRES, J3, Solenoid Power, Bus C, Absent. The voltage source for driving the solenoids is not detected on Bus C; cannot reliably drive these solenoids	Loss of Power Bus C through J2 connector from TRPL/TRPS
108	Control Watchdog Trip Protection This alarm can only occur if Configuration -> ContWdogEn has been enabled.	Verify that the ContWdog is set up correctly in the toolbox and that the source of the signal is changing the value at least once a frame.
	An alarm indicates that the signal space point -> ContWdog has not changed for 5 consecutive frames. The alarm will reset itself if changes are seen for 60 seconds.	Check Ethernet cable and connections.
109	Speed Difference Trip Protection This alarm can only occur if Configuration -> SpeedDifEnable has been enabled.	Verify that the Speed1 signal is set up correctly in the toolbox and that the source of the signal reflects the VTUR pulse rate speed.
	An alarm indicates that the difference between the output signal Internal Points -> Speed1 and the first VPRO pulse rate speed is larger than the percentage Configuration -> OS_DIFF for more than 3 consecutive frames. The alarm will reset itself if the difference is within limits for 60 seconds.	Check Ethernet cable and connections.
110	Stale speed trip protection. This alarm can only occur if Configuration -> StaleSpdEn has been enabled. An alarm indicates that the signal Internal Points -> Speed1 has not changed for 5 consecutive frames. The alarm will reset itself if the speed dithers for 60 seconds.	Verify that the Speed1 signal is set up correctly in the toolbox and that the source of the signal reflects the VTUR pulse rate speed input. Check Ethernet cable and connections.
111-127	Reserved for future use	
128-319	Logic Signal # Voting mismatch. The identified signal from this board disagrees with the voted value	A problem with the input. This could be the device, the wire to the terminal board, the terminal board, or the cable.
320-339	Input Signal # Voting mismatch, Local #, Voted #. The specified input signal varies from the voted value of the signal by more than the TMR Diff Limit	A problem with the input. This could be the device, the wire to the terminal board, the terminal board, or the cable.