GEI-100584A

GE Energy

Application Control Layer Module (ACLE) IS215ACLE

These instructions do not purport to cover all details or variations in equipment, nor to provide for every possible contingency to be met during installation, operation, and maintenance. The information is supplied for informational purposes only, and GE makes no warranty as to the accuracy of the information included herein. Changes, modifications, and/or improvements to equipment and specifications are made periodically and these changes may or may not be reflected herein. It is understood that GE may make changes, modifications, or improvements to the equipment referenced herein or to the document itself at any time. This document is intended for trained personnel familiar with the GE products referenced herein.

GE may have patents or pending patent applications covering subject matter in this document. The furnishing of this document does not provide any license whatsoever to any of these patents.

This document contains proprietary information of General Electric Company, USA and is furnished to its customer solely to assist that customer in the installation, testing, operation, and/or maintenance of the equipment described. This document shall not be reproduced in whole or in part nor shall its contents be disclosed to any third party without the written approval of GE Energy.

GE provides the following document and the information included therein as is and without warranty of any kind, expressed or implied, including but not limited to any implied statutory warranty of merchantability or fitness for particular purpose.

If further assistance or technical information is desired, contact the nearest GE Sales or Service Office, or an authorized GE Sales Representative.

© 2003 - 2006 General Electric Company, USA. All rights reserved.

Mr. Lucian
Sales manager

Joyoung International Trading Co., Ltd
Whatsapp/Wechat: +86 18106906650
Email: Lily@htechplc.com
Mobile: +86 18106906650
Website: www.xm-dcs.com
Address: Room 1503, Building B, Diamond Coast,
No. 96 Lujiang Road, Siming District, Xiamen Fujian

Wechat

* Trademark of General Electric Company
Modbus is a registered trademark of Schneider Automation.
PC/104 and PC/104-*Plus* are trademarks of the PC/104 Consortium.
VersaMax and CIMPLICITY are registered trademarks GE Fanuc Automation North America, Inc.

Safety Symbol Legend

Warning

Indicates a procedure, practice, condition, or statement that, if not strictly observed, could result in personal injury or death.

Caution

Indicates a procedure or condition that, if not strictly observed, could result in damage to or destruction of equipment.

Note Indicates an essential or important procedure or statement.

Contents

Section ***Page***

Functional Description 3
Hardware Features 5
Software Features 8
GE Control Systems Toolbox 8
Related Documents 9
Application Data 10
Power Requirements 10
Adjustable Hardware 10
Connector Pin Signals 10
Status and Fault Indicators 11
Board/Module Replacement 14
Handling Precautions 14
For Simplex or Offline Redundant Control 15
For Redundant Control (Online) 16
Renewal/Warranty Information 18
How to Order a Board 18

Functional Description

The IS215ACLE Application Control Layer (ACLE) module is a microprocessor-based master controller that performs multiple duties over communication networks such as Ethernet. It mounts in all standard EX2100 Excitation Control racks and occupies two full-slots.

The ACLE fully replaces the IS215ACLAH1A (ACLA) module formerly used in EX2100 applications. It does not replace ACLA in exciter applications such as Innovation Series.

In the EX2100, the ACLE mounts in the following control racks and associated backplanes:

- Simplex Thyristor Control rack with IS200ESBP backplane
- Warm Backup Thyristor Control rack with IS200EBKP
- Simplex Regulator Control rack with IS200ERBP backplane
- Redundant Regulator Control rack with IS200ERRB backplane

Note The ACLE and board racks are located in the respective control cabinet.

The ACLE can be ordered in only one I/O configuration: with two 10BaseT Ethernet ports and two serial communication ports (COM1 and COM2). Optional hardware accessories are available. These items must be ordered separately from the ACL and include a serial cable (336A3582P1) that connects a computer's COM port to ACLE COM port. (This same cable connects a computer to the COM port under the keypad assembly on the door of control cabinets.)

Note The cable is the same as the one used on ACLA.

Four versions of the ACLE are available:

- IS215ACLEH1A - 266 MHz CPU running QNX4 operating system (OS)
- IS215ACLEH1B - 400 MHz CPU running QNX4 OS
- IS215ACLEH2A - 266 MHz CPU running QNX6 OS (for ToolboxST* installations)
- IS215ACLEH2B - 400 MHz CPU running QNX6 OS (for ToolboxST installations)

Primary features of the ACL core software include:

- Control blockware language and library
- Online application configuration loading
- I/O point and internal Boolean forcing
- Diagnostics for broken run/start permissives
- Application level alarm messages
- Non-volatile compact flash memory
- Toolbox interface and support through Ethernet

Note Do not reset or power down the ACLE when the red FLASH LED is lit (see figure, *IS215ACLE Module Faceplate* for location). Doing so may corrupt the compact flash file system and a flash reload may be required.

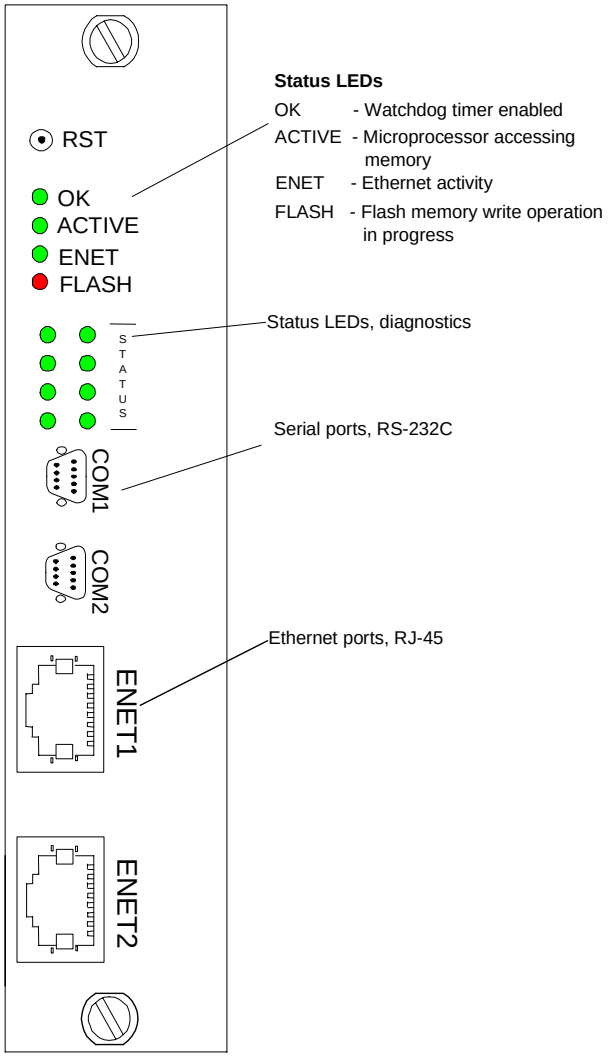

IS215ACLE Module Faceplate

Hardware Features

The ACLE module consists of two printed circuit boards, the IS200ACLE carrier board and a PC/104-*Plus*™ microprocessor board. This module is supplied as a complete assembly. It is not intended for the user to disassemble this module for separate access to the PC/104™ board, carrier board, or dynamic random access memory (DRAM).

Integrated circuits on the PC/104-*Plus* board provide the following features:

- Pentium P5 266 MHz or Tualatin Celeron 400 MHz central processing unit (CPU)
- 256 KB level 2 cache
- 128 MB DRAM (expandable)
- Basic I/O system FLASH ROM (BIOS)
- A secondary 10/100 Mbps Ethernet port
- RS-232 serial ports COM1 and COM2
- IDE interface to compact flash disk
- PCI bus interface
- PC/104 (ISA) bus interface
- Other standard PC/AT compatible elements

Integrated circuits on the ACLE carrier board provide the following features:

- 16 MB compact flash disk (expandable)
- The primary 10/100 Mbps Ethernet port
- 8 KB nonvolatile RAM
- 4K x 32 Dual Port RAM (DPRAM) interface to the backplane
- Standard RJ45 twisted pair Ethernet connectors
- Standard DB9 COM port connectors
- Reset Logic
- Status LEDs
- Board ID
- Software Watchdog

Note Refer to the figure, *ACLE Block Diagram* for an ACLE functional block diagram.

Additional details for various components include:

BIOS is an industry standard Phoenix BIOS stored in flash memory on the PC/104 board. It is supplied pre-programmed and does not need to be changed by the user. Configuration settings for the BIOS are stored in EEROM memory also on the PC/104 board.

DRAM consists of a single SODIMM module seated in a socket on the underside of the PC/104 board.

DPRAM (4k x 32 size) is located on the local bus on the carrier board. The ACLE communicates through the backplane with the IS200DSPXH1_ Digital Signal Processor board (DSPX) through the 32-bit DPRAM. If simultaneous DSPX and ACLE accesses occur on the same address of the DPRAM, hardware automatically resolves the contention by holding off either the ACLE or DSPX board in a wait condition for a maximum of 100 ns.

RESET Switch Logic is connected through the recessed RST pushbutton switch located directly below the top ejector on the ACLE faceplate. This pushbutton resets only the ACLE board, not the entire backplane, and is normally not used in EX2100 control systems. A similar RESET pushbutton on the EISB board in the rack may be used to reset the entire control. However, it is often more convenient to reset the system by cycling control power.

Serial Ports COM1 and COM2 are industry standard 9-pin D connectors located on the ACLE faceplate. Serial cable 336A3582P1 provides direct connection from the ACLE faceplate to standard computer COM ports. COM1 is normally used only during system commissioning to program the Ethernet #1 TCP/IP address using GE Control System Toolbox (toolbox). During normal operation, COM1 is not used, except for diagnostic purposes, and should be disconnected. COM2 is available for use in serial Modbus® applications.

Note See the table, *COM1/COM2 Interface Connector* for COM1/COM2 pin definitions and the figure, *COM1/COM2 (DB9) Interface Connector* for connector diagram.

Ethernet connections use industry standard RJ45 connectors on the ACLE faceplate. Both ports support 10/100BaseT connections. The ACLE automatically detects whether it connected to a 10 Mbps or 100 Mbps network. The shield of the RJ45 jack is grounded to the system chassis, for use if required. However, most applications use UTP cables (unshielded twisted-pair cables with plastic connector bodies), and this ground feature is not used. The table, *ACL Ethernet Interfaces* lists the ACLE Ethernet interfaces. ENET1 is normally used for the toolbox interface and connection to the plant higher level unit data highway (UDH). ENET2 is available for I/O expansion on a private network using components, such as GE Fanuc VersaMax® I/O.

Note See the table, *Ethernet (RJ45) Interface Connector Pin Signal Descriptions* for ENET1/ENET2 pin definitions and the figure, *ENET1/ENET2 Ethernet (RJ45) Interface Connector* for connector diagram.

ACL Ethernet Interfaces

Component	Function	Protocol
GE Control System Toolbox	ACL configuration	TCP/IP
GE Control System Toolbox	DSPX configuration	TCP/IP
CIMPLICITY®	Human-machine interface (HMI)	Ethernet global data (EGD)
ACL Master Controller	Real time control	EGD
VersaMax	I/O expansion	EGD
Modbus	Interface to other systems	Ethernet Modbus SRTP

Board Identification is through a read-only memory chip on the ACLE. It is accessed by the DSPX board to obtain the following information:

- Unique serial number assigned by the semiconductor manufacturer
- Board catalog number
- Major and minor revision record

INT_LAN Time Synchronization provides a periodic time signal to the DSPX board through the INT_LAN signal on the backplane connector P1. The period of the DSPX time tic is fixed at 1 ms.

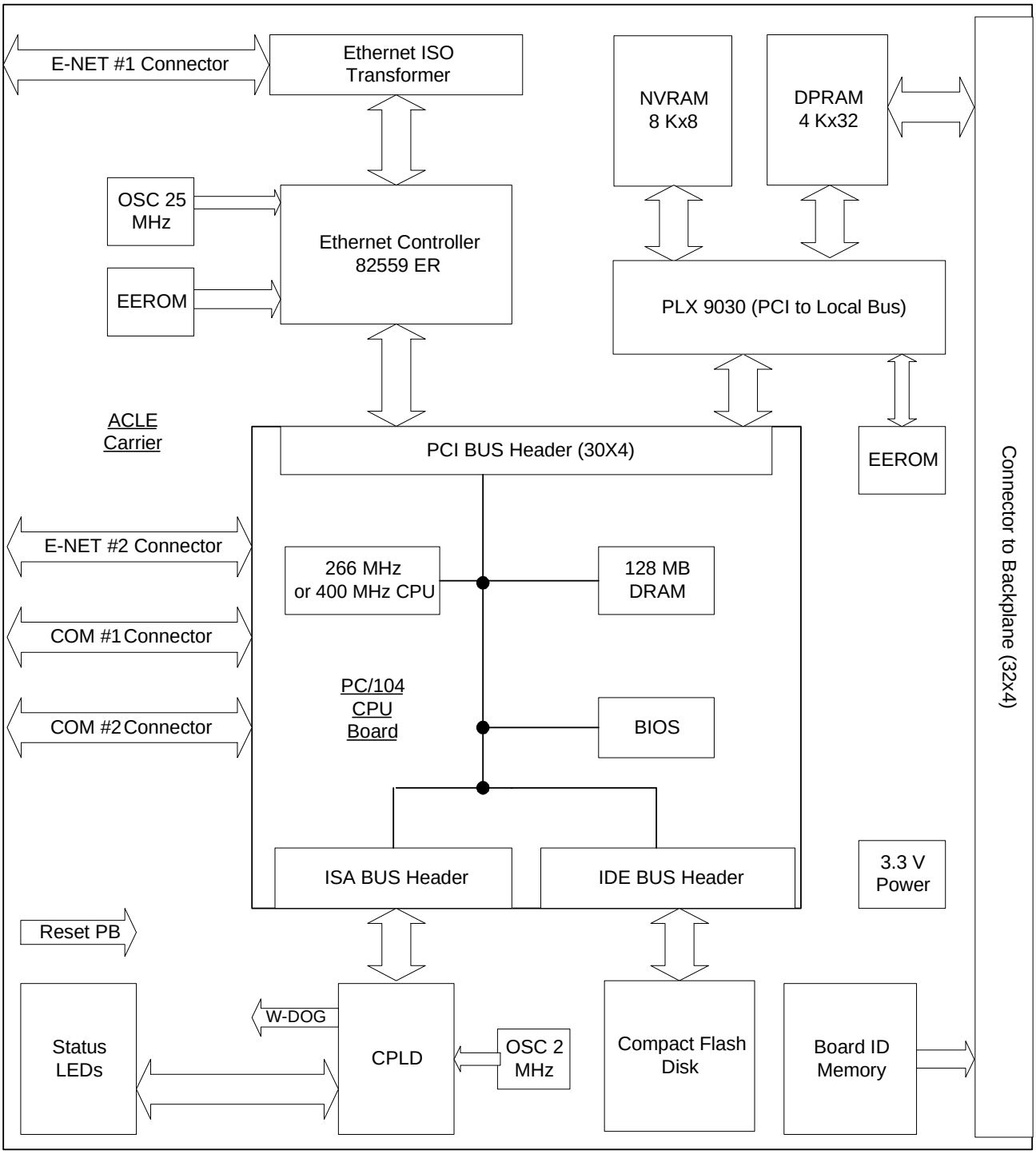

ACLE Block Diagram

Software Features

Basic Input/Output System (BIOS) identifies and initializes the hardware. This is a standard BIOS supplied with the PC/104 processor board, and is not modified by GE. Reprogramming of the BIOS is not normally required and is not supported by the toolbox.

BIOS Configuration identifies specific parameters required for the PC/104 processor board to work correctly in the ACLE environment. These settings are pre-programmed in EEROM and do not need to be changed in normal applications.

Core Load software resides on the compact flash disk. This software includes the QNX 4.2x OS, the file system, and the Ethernet TCP/IP software. When the core load software is installed, the ACLE module is able to start and bring kernel functionality to the Ethernet and COM ports. After a successful start up with the core load installed, but not the runtime or application code, the STATUS LEDs on the ACLE faceplate display a pair of lights in a *walking* pattern. At this point the ACLE is able to communicate through COM1 with the serial loader feature of the toolbox, to download Ethernet settings to the ACLE board. ACLE is supplied with the core load already installed on the compact flash. Toolbox also supports downloading the core load to the compact flash through an external compact flash reader/writer.

Runtime Code contains the basic software needed for ACLE to support full static or regulator functionality. This code is downloaded to the ACLE using the toolbox, communicating through Ethernet port ENET1.

Note A firmware download is required any time an ACLE is replaced.
The H1B version of IS215ACLE requires the following minimum levels of firmware: Thyristor Control: V11.50.02C and Regulator Control: V04.50.02C.

Application Code (PCODE) contains specific patterns and settings used in a particular full static or regulator application. This code is also downloaded through the toolbox through ENET1.

GE Control Systems Toolbox

The ACLE is configured, and its firmware upgraded, using the GE Control System Toolbox (toolbox). Complete application data is downloaded to the ACLE through Ethernet.

Note Refer to *GEH-6414, Control System Toolbox for EX2100 Excitation Control* for toolbox installation and operation instructions.

To configure an ACLE, install the following (available on the GE Turbine Control Systems Solutions eTCSS CD):

- Toolbox
- EX2100 Excitation Control

Toolbox version V10.xx or later is required for full support of ACLE. However replacement of an ACLA with a compatible version of ACLE can be accomplished at installations that have toolbox V8.xx or V9.xx instead of V10.

Warning

To prevent personal injury or equipment damage caused by equipment malfunction, only trained persons should modify any programmable machine.

The toolbox is used to configure the runtime actions of the ACLE. It specifies all application code configuration information and records it using a binary format called *Pcode*. The toolbox downloads Pcode to the ACLE into volatile or permanent (Flash) storage. It is also used to monitor and alter parameters, and to make minor code changes online. The toolbox upgrades the latest product code firmware, such as block libraries, scheduler, and others over the Ethernet.

Note A firmware download is required any time an ACLE is replaced.

Related Documents

This document references other manuals that contain information pertaining to the ACLE manual. It should be used in conjunction with them when additional information is required. Related manuals include the following:

Document	Subject
GEH-6414	Control System Toolbox for EX2100 Excitation Control
GEH-6631	EX2100 Thyristor Control 73, 53 and 42 mm, Installation and Startup Guide
GEH-6632	EX2100 Excitation Control, User's Guide
GEH-6633	EX2100 Thyristor Control 77, 53 and 42 mm, Maintenance and Troubleshooting Guide
GEH-6674	EX2100 Regulator Control, Installation and Startup Guide
GEH-6675	EX2100 Regulator Control, Maintenance and Troubleshooting Guide
GEH-6402	Control System Toolbox for and Innovation Series Controller
GEH-6410	Innovation Series Controllers, System Manual

Application Data

Power Requirements

ACLE Power Requirements

Module	15 V dc (amps)	5 V dc (amps)
IS215ACLEH1A	None	3.0
IS215ACLEH1B	None	3.5

Adjustable Hardware

There are no jumpers on the ACLE carrier board. Jumpers on the PC/104 board are preset at the factory and do not need to be changed.

In addition to the PC/104 board-to-board connectors between the ACLE carrier board and the PC/104 processor board, there are five interconnecting ribbon cables. These should all be properly installed and fully seated. The functions of the ribbon cables are as follows.

- P6 (10 pins) reset interface
- P3 (44 pins) compact flash interface
- P13 (4 pins) ENET2 interface
- P5 (10 pins) COM1 interface
- P4 (10 pins) COM2 interface

Note Refer to the figure, *IS215ACLE Module* for the location of connectors on the ACLE module.

Connector P9 on the ACLE carrier board holds the compact flash disk. This disk is pre-programmed with a bootable core load, and usually does not need to be removed from the board, as runtime and application code are downloaded to it *in-situ* using toolbox. If a new core load is required, the disk can be removed by swinging the retaining clip up from the disk, and carefully sliding the disk out of the connector. The disk can then be re-programmed with a new core load in an external compact flash reader/writer using toolbox.

Connector Pin Signals

Note ACLE board backplane connector P1 requires a custom extender board to access individual pin signals. Checking of these signals is not a part of standard in-service testing/troubleshooting procedures and these signals are not described in this document. PC/104 header signals (J1, J2, & J3) are also not defined. P15 is used for factory test and must remain unconnected in normal installations.

User connectors are located on the ACLE faceplate. Pin signals for these connectors are defined in the following tables:

Table	Connector
3	COM1/COM2 Interface Connectors
4	ENET1/ENET2 Ethernet Interface Connectors

Status and Fault Indicators

Status and fault indicators are located on the ACLE front panel (see the figure, *IS215ACLE Module Faceplate*).

Note For complete STATUS LED fault code information, refer to *GEH-6633, EX2100 Thyristor Control 77, 53 and 42 mm, Maintenance and Troubleshooting Guide* or *GEH-6675, EX2100 Regulator Control, Maintenance and Troubleshooting Guide*.

The LED indicators are as follows:

OK lights solid green when the watchdog timer is enabled and turns off when the watchdog times out. This LED is normally off during the start process and turns on at the end of the startup cycle.

ACTIVE is lit green when the CPU is accessing memory. This LED blinks during the start process and may either blink or remain fully on once the application code begins running.

ENET blinks green when the Ethernet port ENET1 is connected and Ethernet activity is present. There is no corresponding faceplate LED for ENET2.

FLASH is lit solid red when a compact flash access (read or write) operation is occurring, and goes out a few seconds after the operation has completed. This normally only occurs during start-up and during software downloads to the ACLE during commissioning. It does not come on during normal operation.

Note Power should not be turned off while this LED is on, to avoid possible corruption of the compact flash.

STATUS displays diagnostic information. The LEDs (green) indicate BIOS steps during the ACLE start sequence.

- Once the ACLE is properly initialized, each LED lights for 0.5 seconds and then goes out, and another LED lights, in a *walking* sequence. If an LED remains lit, the ACLE has stalled.
- If a fault occurs while loading the application code, the LEDs flashes a Status Code indicating an application fault.
- If a fault occurs during OS startup, the LEDs present a non-flashing BIOS Status Code indicating a startup fault.

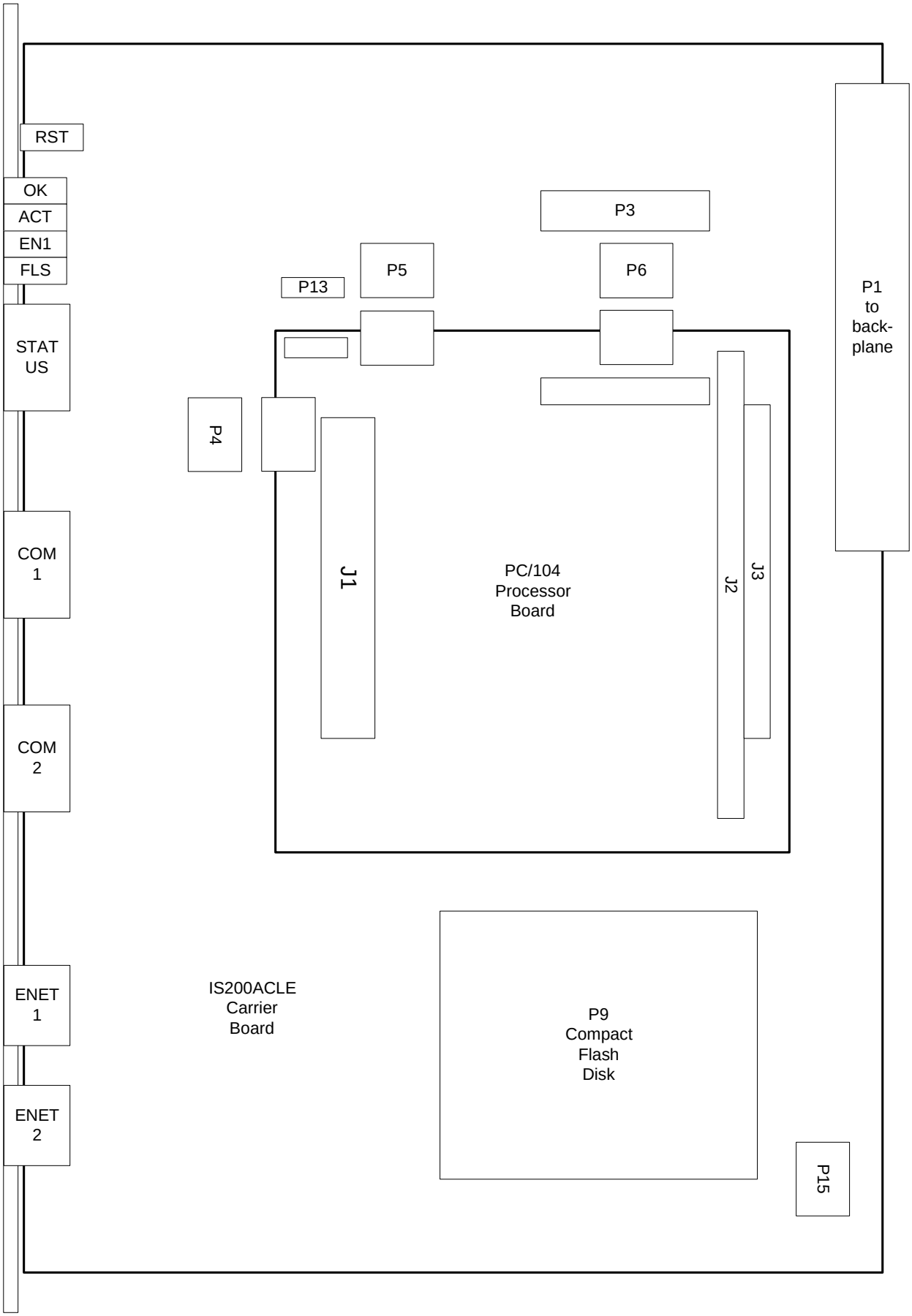

IS215ACLE Module

COM1/COM2 Interface Connector

Pin No	Nomenclature	Description
1	DCD	Data Carrier Detect, from modem
2	RXD	Received Data, from modem
3	TXD	Transmitted Data, to modem
4	DTR	Data Terminal Ready, to modem
5	SIG GND	Serial Interface Ground reference
6	DSR	Data Set Ready, to modem
7	RTS	Request To Send, to modem
8	CTS	Clear To Send, from modem
9	RI	Ring Indicator, from modem

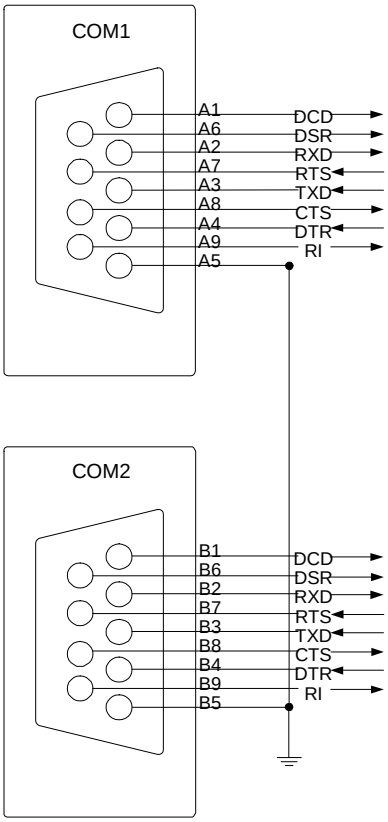

COM1/COM2 (DB9) Interface Connector

Ethernet (RJ45) Interface Connector Pin Signal Descriptions

Pin No	Nomenclature	Description
1	TPTD+	Transmit (differential positive)
2	TPTD-	Transmit (differential negative)
3	TPRD+	Receive (differential positive)
4-5		Not used
6	TPRD-	Receive (differential negative)
7-8		Not used

Note A direct Ethernet connection from the ACLE to a computer requires an Ethernet null modem (crossover) cable.

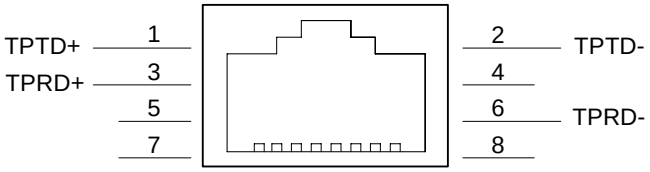

ENET1/ENET2 Ethernet (RJ45) Interface Connector

Board/Module Replacement

The IS215ACLE module consists of a carrier board and a PC/104 processor board. To order a replacement module that includes the processor board, specify an IS215ACLE module.

Note The IS215ACLE module should be replaced as a unit. It is not recommended to replace the boards individually due to software and hardware compatibility issues.

Handling Precautions

Caution

To prevent component damage caused by static electricity, treat all boards with static sensitive handling techniques. Wear a wrist-grounding strap when handling boards or components, but only after boards or components have been removed from potentially energized equipment and are at a normally grounded workstation.

Printed wiring boards may contain static-sensitive components. Therefore, GE ships all replacement boards in antistatic bags.

Use the following guidelines when handling boards:

- Store boards in antistatic bags or boxes.
- Use a grounding strap when handling boards or board components (per previous *Caution* criteria).

Note Full static and regulators can be supplied with either simplex or redundant controls. In redundant full static, it is possible to power down the inactive ACLE and replace it while the other ACLE is active (online). In redundant regulators, it may be possible to replace the inactive ACLE if control power for each rack is independently controllable. Refer to the appropriate section below for online or offline replacement of the ACLE.

Note An ACLE module may be supplied to replace an ACLA module. In redundant systems, it is not possible to use an ACLE in one section of the control and an ACLA in another. Both sections (M1 and M2) must contain ACLE boards. Conversion from ACLA to ACLE must be performed as an offline repair since both sections of the control must be powered down. The instructions below refer to the board being replaced as ACL_ to indicate that it may be either an ACLA or ACLE.

Note An H1B ACLE module can be supplied to replace an H1A module. In redundant systems, H1A and H1B modules can be used in the same control rack. Online replacement of an H1A with an H1B is possible only if the control meets the minimum firmware revision requirements given in the section, *Software Features.*

For Simplex or Offline Redundant Control

Warning

To prevent electric shock, turn off power to the control, then test to verify that no power exists in the board before touching it or any connected circuits. There are special procedures for online repair, see For Redundant Control.

Caution

To prevent equipment damage, do not remove, insert, or adjust board connections while power is applied to the equipment.

➢ **To replace the board offline**

Note Refer *GEH-6631, EX2100 Thyristor Control 73, 53 and 42 mm, Installation and Startup Guide* and *GEH-6674, EX2100 Regulator Control, Installation and Startup Guide* for complete de-energizing procedures and follow all local practices for lock-out/tag-out.

1. Make sure that the control has been de-energized.
2. Open the control cabinet door and check that the power indicators on the EPSM power supplies are off, and the LEDs on the ACL_ and all other boards are off.
3. Disconnect the Ethernet and any other communication cables from the ACL_ front panel.

   Note Make sure cables are labeled correctly before removing.

4. Carefully remove the ACLE board (or ACLA board and the attached blank plate underneath it) from the control rack, as follows:
   - **a** Loosen the screws at the top and bottom of the ACL_ faceplate, near the ejector tabs. (The screws are captive in the faceplate and should not be removed.)
   - **b** Unseat the ACL_ and attached plate (if present) by raising the ejector tabs.
   - **c** Using both hands, gently pull the assembly from the rack.

5 Slide the replacement ACLE board back into the correct slot in the rack.

6 Begin seating the board by firmly pressing the top and bottom of the faceplate at the same time with your thumbs.

7 Finish seating the module in the slot by starting and then alternately tightening the screws at the top and bottom of the faceplate assembly. **Tighten the screws evenly** to ensure that the module is seated squarely.

8 Reconnect all communication cables that were disconnected when the old module was removed.

Note After the ACLE is installed, it must be reconfigured. Refer to *GEH-6414, Control System Toolbox for EX2100 Excitation Control* for the required procedures.

9 If this was an ACLE replacement of an ACLA board, follow the special instructions that shipped with the replacement board before attempting to load RUNTIME and EX2100 job file.

For Redundant Control (Online)

For a redundant full static control or redundant regulator, it is possible to replace a failed ACLE (but not an ACLA) while the exciter is running. You have the option to leave the failed ACL_ in place and let the system run on the remaining controller. However, in the unlikely event of a second control failure the system will shut down. If you decide to change a failed ACLE board, follow the procedure below.

Note A failed ACLEH1A cannot be replaced online by an ACLEH1B unless the firmware in the control rack is already at the minimum revision level listed in the section, *Software Features*.

➢ To replace a board in a redundant control rack online

1 Open the control cabinet door and confirm the failed ACLE from the indicators on the front of the board. Check that the rotating green LEDs are stopped, if both ACLE LEDs are rotating, check the keypad to determine the failed ACLE.

Warning

Care should be taken in replacing the board since the other controllers, power supplies, and terminal boards are still energized and active.

2 For full static control:

a Be sure the section of the control to be serviced is not the active master. This is done by checking the ACTIVE LEDs on the ESEL board to confirm that control is transferred to the other master.

b De-energize the section of the control rack containing the ACLE to be replaced, either section M1 or M2. This section is de-energized by switching off the appropriate switch of the control power distribution module (EPDM).

c Check that the LED indicators on the appropriate section of the EPDM and the EPSM are both off.

d Check that all the power indicators on the boards in the section of the control rack containing the ACLE to be replaced are off before touching the ACLE or any connected circuits.

3 For regulators:

   a Be sure the section of the control to be serviced is not the active master. This is done by checking the **GATING** LED on the ERDD board.

   b De-energize the inactive rack, either M1 or M2/C, by turning off all sources of power (ac and/or dc). If the racks are not fed by circuit breakers independent of each other, the repair must be done offline.

   c Check that all power indicator LEDs on boards in the rack to be serviced are off before touching the ACLE or any connected circuits.

4 Disconnect the Ethernet and any other communication cables from the ACLE front panel.

5 Carefully remove the ACLE board from the control rack as follows:

   a Loosen the screws at the top and bottom of the ACLE faceplate, near the ejector tabs. (The screws are captive in the faceplate and should not be removed.)

   b Unseat the ACLE by raising the ejector tabs.

   c Using both hands, gently pull both from the rack.

6 Slide the replacement ACLE board and plate into the correct slot in the rack.

7 Begin seating the board by firmly pressing the top and bottom of the faceplate at the same time with your thumbs.

8 Finish seating the module in the slot by starting and then alternately tightening the screws at the top and bottom of the faceplate assembly. **Tighten the screws evenly** to ensure that the module is seated squarely.

9 Reconnect all communication cables that were disconnected when the old module was removed.

10 Re-apply power to the control rack and check that the LED power indicators on the EPSM come on. Check that the green STATUS LEDs light on the ACLE, and green power LEDs on the adjacent controller boards come on.

11 From the toolbox, reconfigure and download the ACLE. If this was an ACLE replacement of an ACLA board, follow the special instructions that shipped with the replacement board before attempting to load RUNTIME and EX2100 job file.

12 The replaced ACLE can be tested by transferring control from the active master to the inactive master and observing correct operation.

Caution

After the ACLE is replaced, it must be reconfigured. Refer to GEH-6414,Control System Toolbox for EX2100 Excitation Control for the required procedures.

Renewal/Warranty Information

How to Order a Board

When ordering a replacement board for a GE product, you need to know:

- How to accurately identify the part
- If the part is under warranty
- How to place the order

Board Identification

A printed wiring board is identified by an alphanumeric **part (catalog) number** located near its edge. The following figure explains the structure of the part number.

The board's functional acronym, shown below, is normally based on the **board description**, or name.

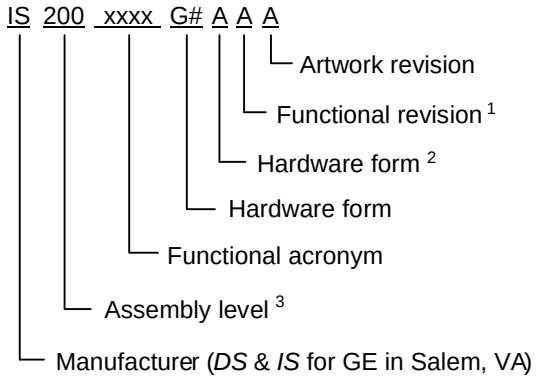

[1]Backward compatible
[2]Not backward compatible
[3]*200* = a base-level board
215 = a higher level assembly or added components
220 = pack specific assembly
230 = a higher level module

Board Part Number Conventions

Placing the Order

Renewals/spares (or those not under warranty) should be ordered by contacting the nearest GE Sales or Service Office, or an authorized GE Sales Representative. Be sure to include:

- Complete part number and description
- Serial number
- Material List (ML) number

Note All digits are important when ordering or replacing any board. The factory may substitute later versions of replacement boards based on availability and design enhancements. However, GE Energy ensures backward compatibility of replacement boards.

Notes

GE Energy
1501 Roanoke Blvd.
Salem, VA 24153-6492 USA

1 540 387 7000
www.geenergy.com

GEI-100584A
Revised 061207
Issued 030813