Table of Contents

Configuration 2
TREG Turbine Emergency Trip 2
Functional Description 2
Mark VI Systems 2
Mark VIe Systems 2
Installation 4
Operation 4
Control of Trip Solenoids 5
Solenoid Trip Tests 6
Specifications 7
Diagnostics 7
Configuration 7

Mr. Lucian
Sales manager

Joyoung International Trading Co., Ltd
Whatsapp/Wechat: +86 18106906650
Email: Lily@htechplc.com
Mobile: +86 18106906650
Website: www.xm-dcs.com
Address: Room 1503, Building B, Diamond Coast,
No. 96 Lujiang Road, Siming District, Xiamen Fujian

Wechat

Configuration

Configuration of the terminal board is by means of jumpers. For location of these jumpers refer to the *Installation* diagram. The jumper choices are as follows:

- Jumper JPA1 selects either current input or voltage input
- Jumper JPB1 selects whether the return is connected to common or is left open

All other configuration is for VPRO and is done from the toolbox.

TREG Turbine Emergency Trip

Functional Description

The Gas Turbine Emergency Trip (TREG) terminal board provides power to three emergency trip solenoids and is controlled by the I/O controller. Up to three trip solenoids can be connected between the TREG and TRPG terminal boards. TREG provides the positive side of the dc power to the solenoids and TRPG provides the negative side. The I/O controller provides emergency overspeed protection, emergency stop functions, and controls the 12 relays on TREG, nine of which form three groups of three to vote inputs controlling the three trip solenoids.

There are a number of board types as follows:

- The H1A version is not used for new production and is replaced by H1B.
- H1B is the primary version for 125 V dc applications. Control power from the JX1, JY1, and JZ1 connectors are diode combined to create redundant power on the board for status feedback circuits and powering the economizing relays. Power separation is maintained for the trip relay circuits.
- H2B is used for 24 V dc applications. All other features are the same as H1B.
- H3B is a special version of H1B for use in systems with redundant TREG boards. Feedback circuit and economizing relay power is provided only by the JX1 connector.
- H4B is a special version of H1B for use in systems with redundant TREG boards. Feedback circuit and economizing relay power is provided only by the JY1 connector.
- H5B is a special version of H1B for use in systems with redundant TREG boards. Feedback circuit and economizing relay power is provided only by the JZ1 connector.

In redundant TREG applications, it is typical to find one H3B and one H4B board used together. It is important that system repairs be done with the correct board type to maintain the control power separation designed into these systems.

Mark VI Systems

In Mark* VI systems, the VPRO works with the TREG terminal board. Cables with molded plugs connect TREG to the VPRO module.

Mark VIe Systems

In Mark VIe systems, TREG is controlled by the PPRO pack on SPRO. The PPRO I/O packs plug into the D-type connectors on SPRO. Cables with molded plugs connect TREG to the SPRO board.

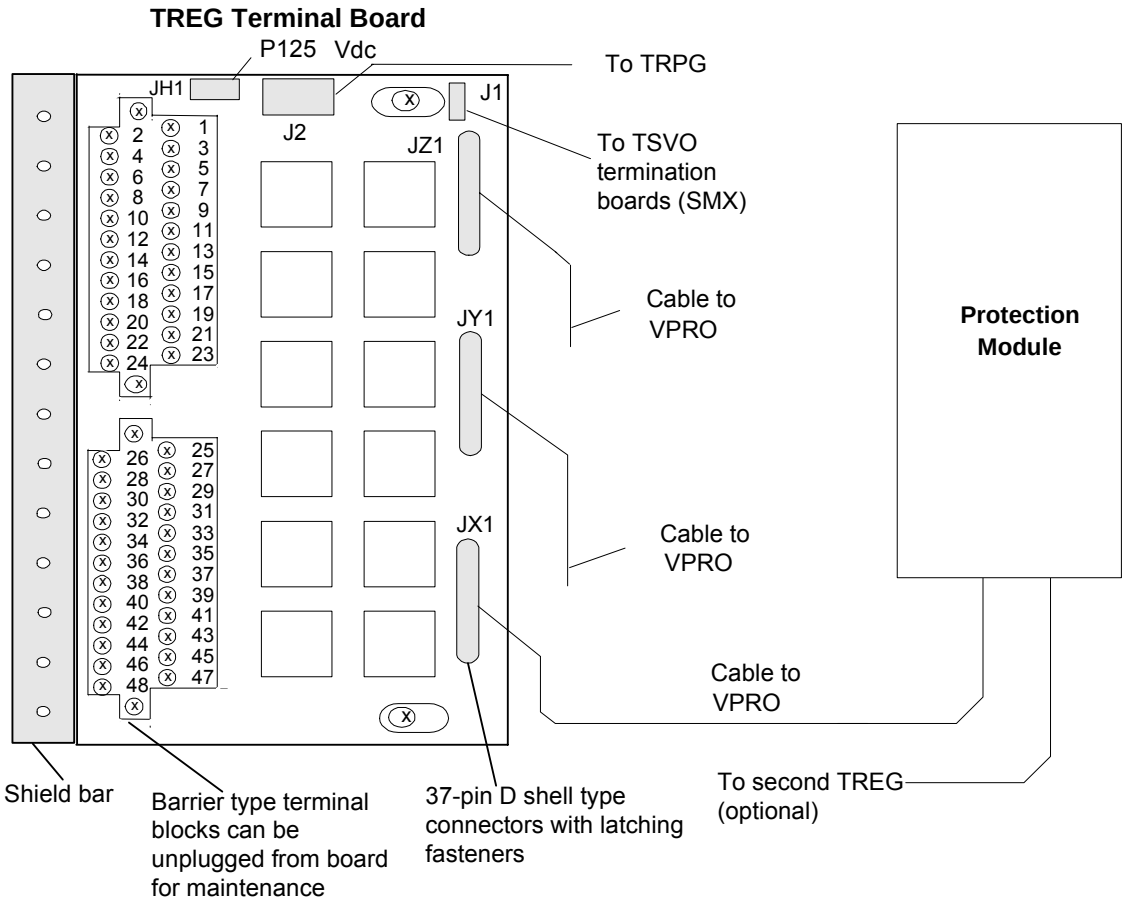

TREG Turbine Emergency Trip Terminal Board, and Protection Module I/O Controller

Installation

The three trip solenoids, economizing resistors, and the emergency stop are wired directly to the first I/O terminal block. Up to seven trip interlocks can be wired to the second terminal block. The wiring connections are shown in the following figure.

Note TREGH2B is a 24 V dc version of the terminal board.

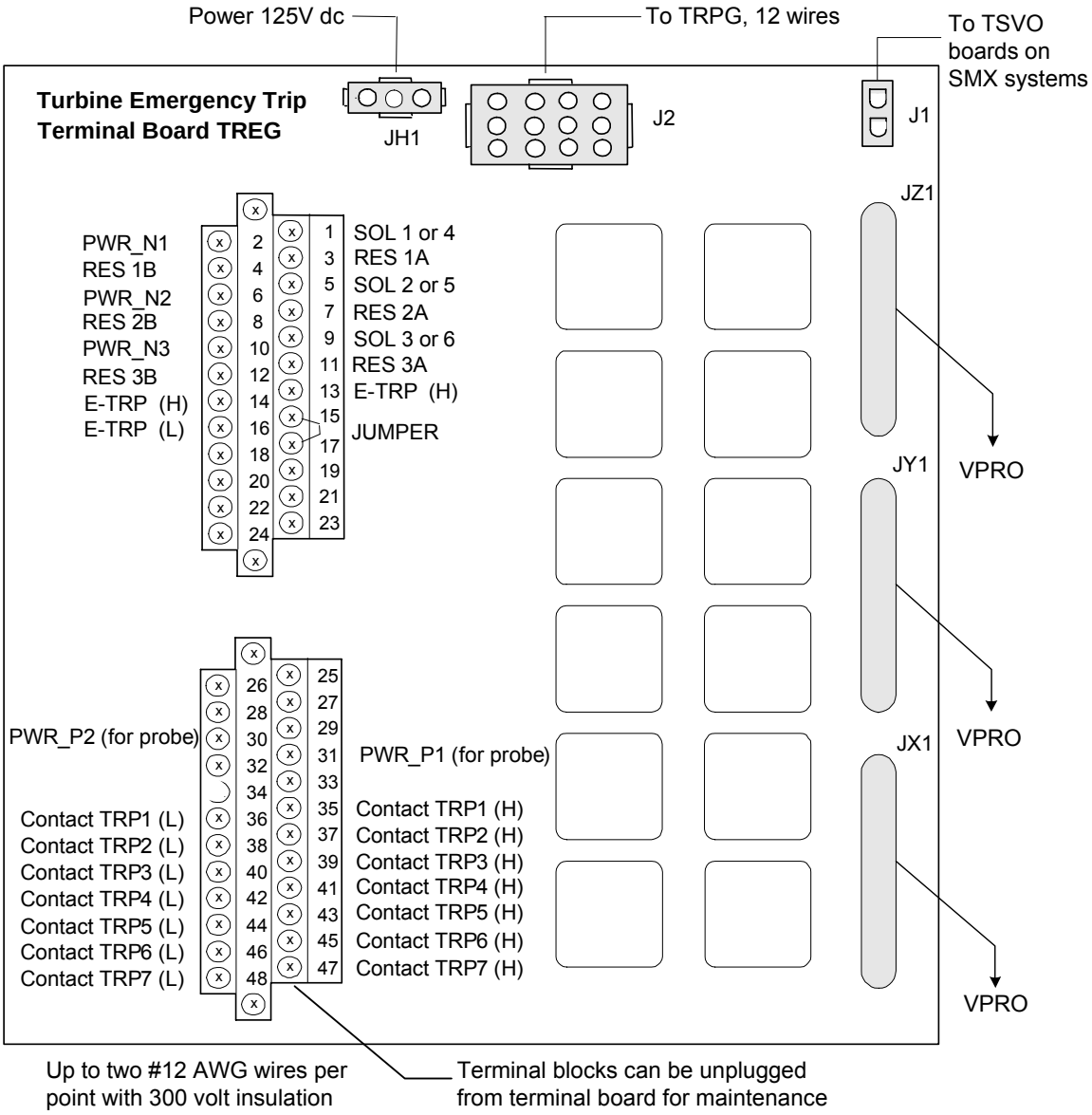

TREG Terminal Board Wiring

Operation

TREG is entirely controlled by the VPRO protection module, and the only connections to the control modules are the J2 power cable and through the trip solenoids. In simplex systems a third cable carries a trip signal from J1 to the TSVO terminal board, providing a servo valve clamp function upon turbine trip.

Control of Trip Solenoids

Both TRPG and TREG control the trip solenoids so that either one can remove power and actuate the hydraulics to close the steam or fuel valves. The nine trip relay coils on TREG are supplied with 28 V dc from the I/O controller. The trip solenoids are supplied with 125 V dc through plug J2, and draw up to 1 A with a 0.1 second L/R time constant.

Note The solenoid circuit has a metal oxide varistor (MOV) for current suppression and a 10 Ω, 70 W economizing resistor.

A separately fused 125 V dc feeder is provided from the turbine control for the solenoids, which energize in the run mode and de-energize in the trip mode. Diagnostics monitor each 125 V dc feeder from the power distribution module at its point of entry on the terminal board to verify the fuse integrity and the cable connection.

Two series contacts from each emergency trip relay (ETR1, 2, 3) are connected to the positive 125 V dc feeder for each solenoid, and two series contacts from each primary trip relay (PTR1,2,3 in TRPG) are connected to the negative 125 V dc feeder for each solenoid. An economizing relay (KE1, 2, 3) is supplied for each solenoid with a normally closed contact in parallel with the current limiting resistor. These relays are used to reduce the current load after the solenoids are energized. The ETR and KE relay coils are powered from a 28 V dc source from the I/O controller. Each I/O controller in each of the R8, S8, and T8 sections supplies an independent 28 V dc source.

The 28 V dc bus is current limited and used for power to an external manual emergency trip contact, shown as E-STOP. Three master trip relays (K4X, K4Y, K4Z) disconnect the 28 V dc bus from the ETR, and KE relay coils if a manual emergency trip occurs. Any trip that originates in either the protection module (such as EOS) or the TREG (such as a manual trip) will cause each of the three protection module sections to transmit a trip command over the IONet to the control module, and may be used to identify the source of the trip.

In addition, the K4CL servo clamp relay will energize and send a contact feedback directly from the TREG terminal board to the TSVO servo terminal board. TSVO disconnects the servo current source from the terminal block and applies a bias to drive the control valve closed. This is only used on simplex applications to protect against the servo amplifier failing high.

Note The primary and emergency overspeed systems will trip the hydraulic trip solenoids independent of this circuit.

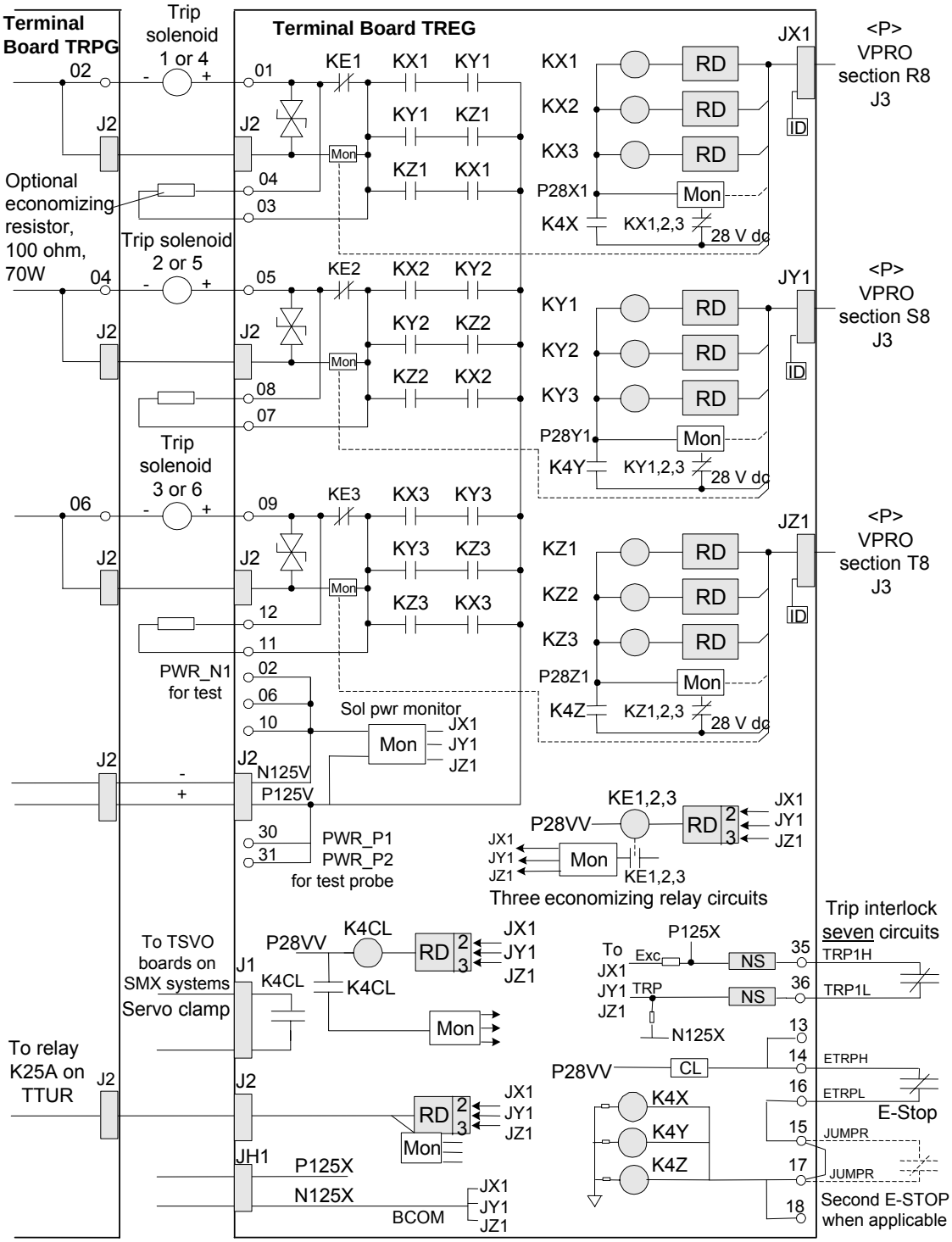

TREG Board, Trip Interlocks, and Trip Solenoids

Solenoid Trip Tests

Application software in the controller is used to initiate tests of the trip solenoids. Online tests allow each of the trip solenoids to be manually tripped one at a time, either through the PTR relays from the controller, or through the ETR relays from the protection module. A contact from each solenoid circuit is wired back as a contact input to give a positive indication that the solenoid has tripped. Primary and emergency offline overspeed tests are provided too for verification of actual trips due to software simulated trip overspeed conditions.

Specifications

Item	Specification
Number of trip solenoids	Three solenoids per TREG (total of six per I/O controller)
Trip solenoid rating	H1 - 125 V dc standard with 1 A draw
	H2 - 24 V dc is alternate with 1 A draw
Trip solenoid circuits	Circuits rated for NEMA class E creepage and clearance
	Circuits can clear a 15 A fuse with all circuits fully loaded
Solenoid inductance	Solenoid maximum L/R time constant is 0.1 second
Suppression	MOV across the solenoid
Relay outputs	Three economizer relay outputs, two second delay to energize
	Driver to breaker relay K25A on TTUR
	Servo clamp relay on TSVO
Solenoid control relay contacts	Contacts are rated to interrupt inductive solenoid loads at 125 V dc, 1 A
	Bus voltage can vary from 70 to 145 V dc
Trip inputs	Seven trip interlocks to the I/O controller protection module, 125/24 V dc
	One emergency stop hard wired trip interlock, 24 V dc
Trip interlock excitation	H1 - Nominal 125 V dc, floating, ranging from 100 to 145 V dc
	H2 - Nominal 24 V dc, floating, ranging from 18.5 to 32 V dc
Trip interlock current	H1 for 125 V dc applications:
	Circuits draw 2.5 mA (50 Ω)
	H2 for 24 V dc applications:
	Circuits draw 2.5 mA (10 Ω)
Trip interlock isolation	Optical isolation to 1500 V on all inputs
Trip interlock filter	Hardware filter, 4 ms
Trip interlock ac voltage rejection	60 V rms @ 50/60 Hz at 125 V dc excitation
Size	17.8 cm wide x 33.02 cm, high (7.0 in x 13.0 in)

Diagnostics

The I/O controller runs diagnostics on the TREG board and connected devices. The diagnostics cover the trip relay driver and contact feedbacks, solenoid voltage, economizer relay driver and contact feedbacks, K25A relay driver and coil, servo clamp relay driver and contact feedback, and the solenoid voltage source. If any of these do not agree with the desired value then a fault is created.

TREG connectors JX1, JY1, and JZ1 have their own ID device that is interrogated by I/O controller. The ID device is a read-only chip coded with the terminal board serial number, board type, revision number, and the plug location. When the chip is read by the I/O board and a mismatch is encountered, a hardware incompatibility fault is created.

Configuration

There are no switches on the terminal board.

Note A jumper must be placed across terminals 15 and 17 if the second emergency stop input is not required.