GEI-100532B

GE Energy

Exciter Gate Pulse Amplifier Board IS200EHPAG_B

These instructions do not purport to cover all details or variations in equipment, nor to provide for every possible contingency to be met during installation, operation, and maintenance. The information is supplied for informational purposes only, and GE makes no warranty as to the accuracy of the information included herein. Changes, modifications, and/or improvements to equipment and specifications are made periodically and these changes may or may not be reflected herein. It is understood that GE may make changes, modifications, or improvements to the equipment referenced herein or to the document itself at any time. This document is intended for trained personnel familiar with the GE products referenced herein.

GE may have patents or pending patent applications covering subject matter in this document. The furnishing of this document does not provide any license whatsoever to any of these patents. All license inquiries should be directed to the address below. If further information is desired, or if particular problems arise that are not covered sufficiently for the purchaser's purpose, the matter should be referred to:

GE Energy
Post Sales Service
1501 Roanoke Blvd.
Salem, VA 24153-6492 USA

Phone: + 1 888 GE4 SERV (888 434 7378, United States)
+ 1 540 378 3280 (International)

Fax: + 1 540 387 8606 (All)

("+" indicates the international access code required when calling from outside the USA)

This document contains proprietary information of General Electric Company, USA and is furnished to its customer solely to assist that customer in the installation, testing, operation, and/or maintenance of the equipment described. This document shall not be reproduced in whole or in part nor shall its contents be disclosed to any third party without the written approval of GE Energy.

GE provides the following document and the information included therein as is and without warranty of any kind, express or implied, including but not limited to any implied statutory warranty of merchantability or fitness for particular purpose.

Mr. Lucian
Sales manager

Joyoung International Trading Co., Ltd
Whatsapp/Wechat: +86 18106906650
Email: Lily@htechplc.com
Mobile: +86 18106906650
Website: www.xm-dcs.com
Address: Room 1503, Building B, Diamond Coast,
No. 96 Lujiang Road, Siming District, Xiamen Fujian

Wechat

Safety Symbol Legend

Warning	**Indicates a procedure, practice, condition, or statement that, if not strictly observed, could result in personal injury or death.**
Caution	**Indicates a procedure or condition that, if not strictly observed, could result in damage to or destruction of equipment.**

Note Indicates an essential or important procedure or statement.

Section ***Page***

Functional Description....3
Gate Command Inputs....4
Sensor Inputs....4
Sensor Feedback Logic....5
Application Data....6
I/O Connections....6
Jumpers and Testpoints....11
Board Replacement....12
Handling Precautions....12
Replacement Procedures....12
Renewal/Warranty Information....13
Board Identification....13
Warranty Terms....14
Placing the Order....14

Functional Description

The IS200EHPA Gate Pulse Amplifier Board (EHPA) is used in 100 mm EX2100™ Excitation Control. It takes the gate commands from the ESEL and controls the gate firing of up to six Silicon Controlled Rectifiers (SCRs) on the Power Bridge. It is also the interface for current conduction feedback, as well as bridge airflow, line filter airflow and blown fuse detection, and bridge temperature monitoring.

Some revisions of EHPA include support for EHFC, an optional daughterboard that allows start/stop control of the bridge cooling fan or redundant (lead/lag) bridge cooling fans. Refer to GEI-100548 for details of the EHFC interfaces and operation.

The EHPA functional model with the major I/O is shown in the following figure. A nominal 125 V dc power source from the EPDM supplies an on-board dc/dc converter, that provides power for SCR gating over the full range of input supply voltage. LEDs provide visual indication of the status of the EHPA power supply, input gate commands from ESEL, EHPA outputs to the SCRs, currents into the bridge, line filter, cooling fan rotation, bridge temperature, alarms, or fault conditions.

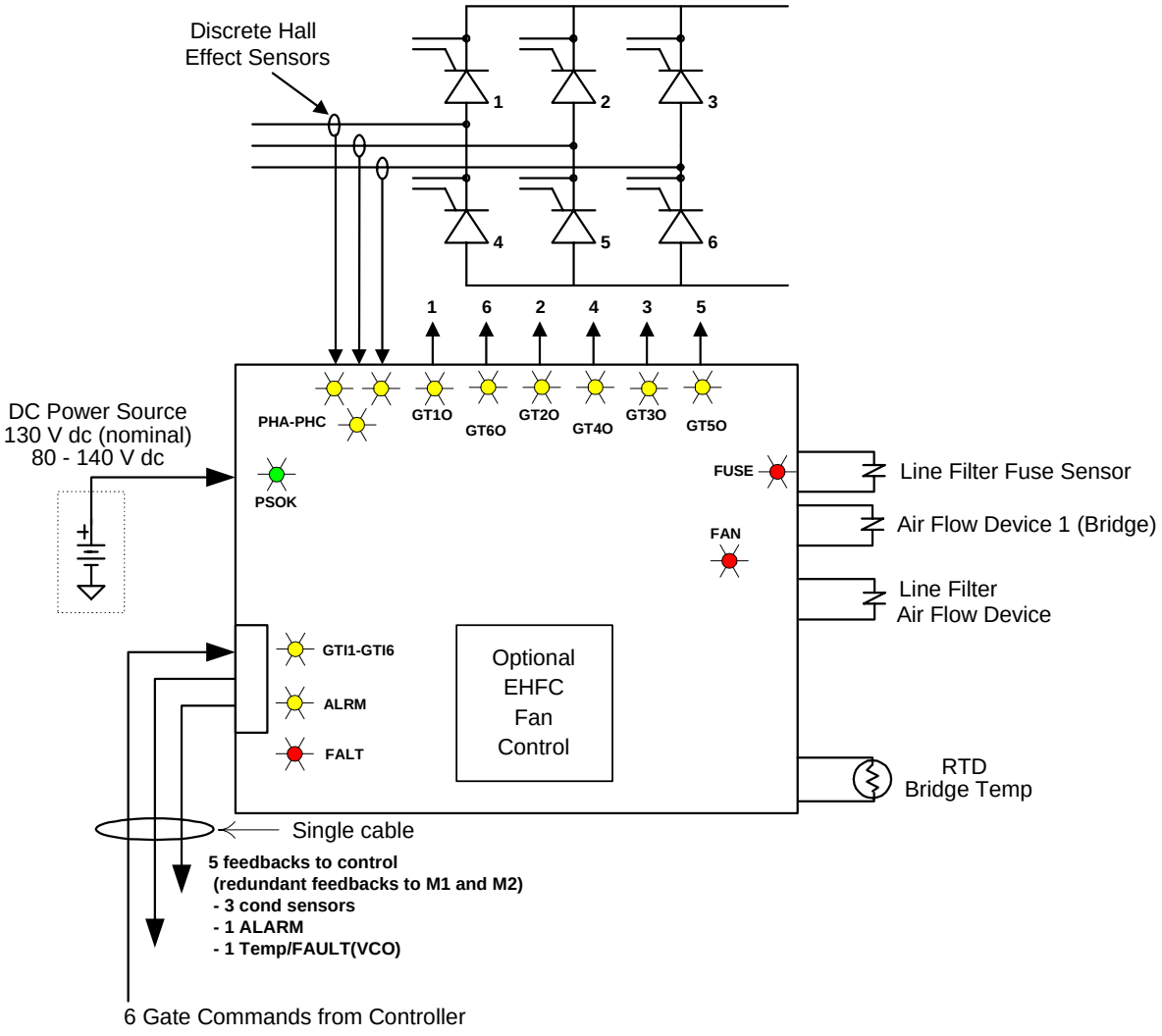

Board Functional Diagram

Gate Command Inputs

The EHPA receives a total of six gate commands from the ESEL through a twisted pair, multiconductor, shielded cable. Gate commands over the differential pair are optically coupled, filtered, ac coupled, and sent to the Gate Pulse Amplifier (GPA). There are six GPAs, one for each SCR. EHPA provides galvanical isolation between individual SCR gates.

Sensor Inputs

Mechanical and electrical operating variables on the bridge are sensed and fed back to the control as follows:

Conduction currents are sensed on all three phases of the bridge input. The EHPA acts as an interface between Hall Effect sensors located on the EMCS boards and the system control. The EHPA provides power to the EMCS, receiving a signal from EMCS indicating the status of current flow through each leg of the three-phase bridge input. These status signals are delivered to the EHPA at J9–J11. The EHPA then conditions these signals and sends the bridge status out to the controller.

Bridge temperature is sensed through an RTD (thermistor) sensor input at J13.

Bridge airflow sensor (fan rotation) detects loss of fan cooling in the bridge. One fan can be connected to the EHPA through J12. The EHPA accepts either a pulsed or dry-contact, normally open sensor input from the fan. The mode of signal detection is configured through berg jumper JP2. A second redundant fan may be connected through the optional daughterboard EHFC.

Line filter fuse failure is sensed at J14 on the EHPA. This sensor input accepts a single, normally closed, dry contact input.

Line filter fan rotation is sensed at J20 on the EHPA. Most applications do not require fan cooling for the line filter. This feature, when required, is configured through berg jumper JP3.

Sensor Feedback Logic

EHPA fault and alarm conditions are generated in a logic circuit, and the resulting signals sent to the control. The circuit block diagram is shown in the following figure:

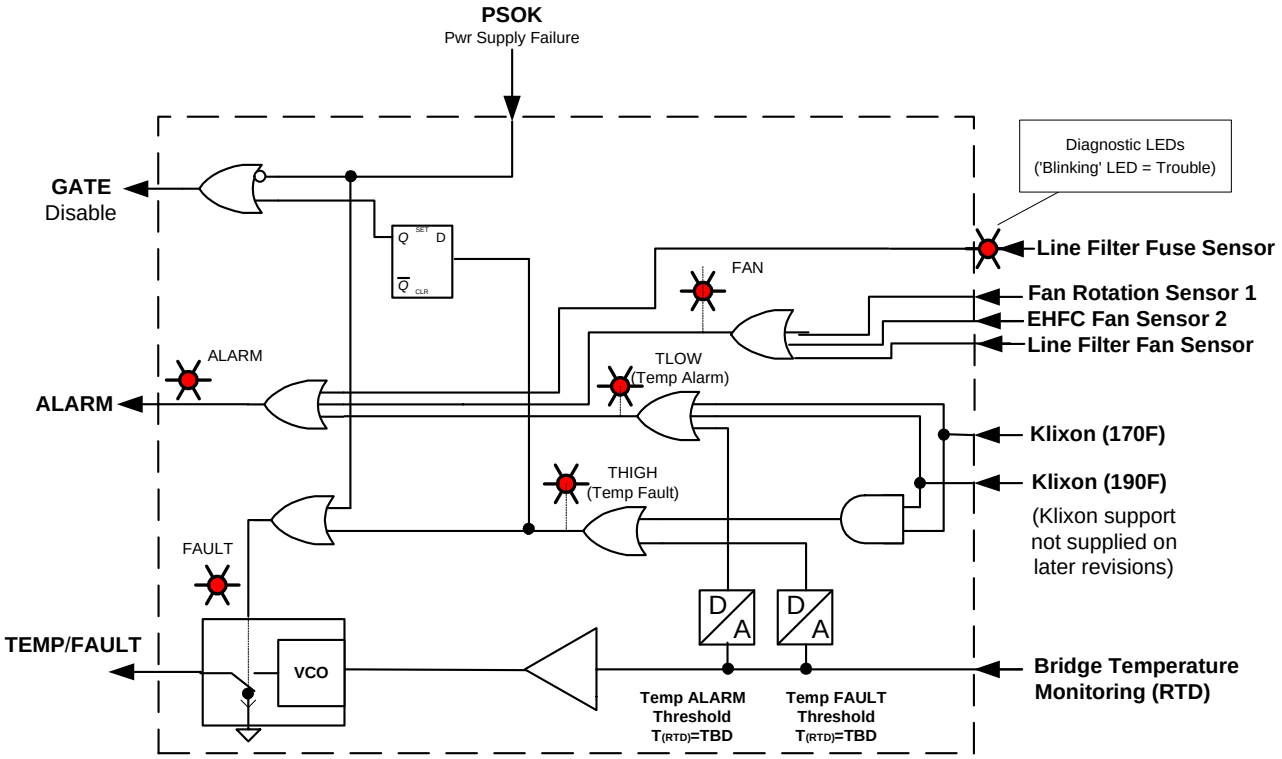

Bridge Temperature/Airflow Alarm Diagram

An alarm is generated on a signal from the line filter or fans, or if the RTD exceeds an alarm threshold. A temperature trip is generated if the RTD exceeds a fault threshold, or if the bridge cooling fan(s) fail.

There are two failure modes that cause the bridge to be shut down, a temperature trip or an EHPA power supply failure. If either one of these occurs, the EHPA stops gating until EHPA control power is cycled.

Application Data

I/O Connections

Individual SCR gate outputs are cabled to the bridge through two-pin connectors J1, J2, J3, J4, J5, and J6, as follows:

J1–6 Gate Power Connections to SCRs 1–6

Pin	Signal
J_-1*	SCR_* Cathode
J_-2*	SCR_* Gate

* The connector number and SCR number match. For example, J3-1 is the Cathode connection for SCR3.

The power supply is a nominal 125 V dc (80-140 V dc) through connector J8 as follows:

J8 Power Supply Connector Pin Description

Pin	Description
1	Power Supply Input, 125 V dc
2	Power Supply Common, PSCOM

Layout of the EHPA board is shown in the following figure.

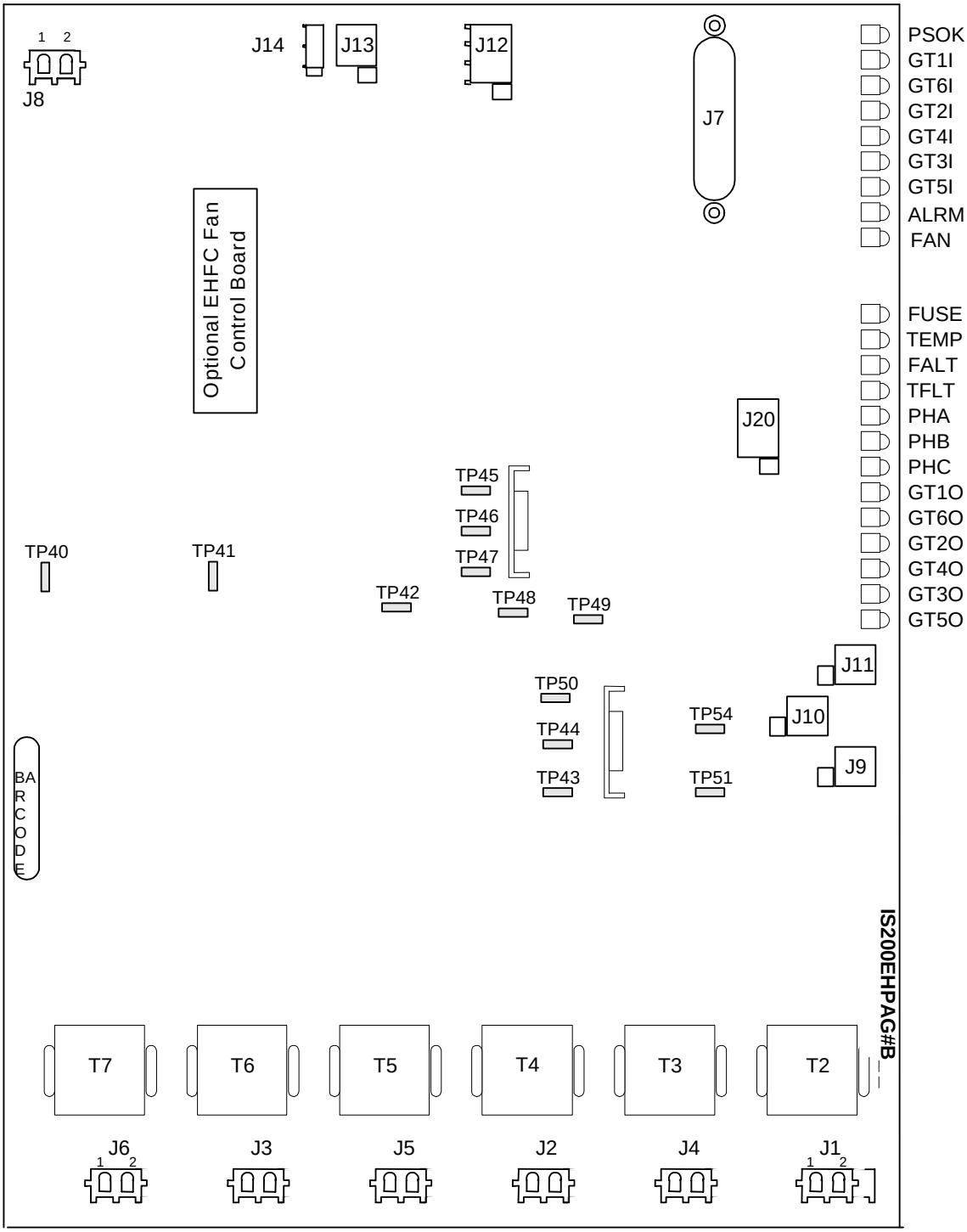

Board Layout

Cable connector J7 carries the gate commands from the ESEL board and carries bridge temperature/alarm signals back to the control as follows:

J7 Connector, (Cable to Control)

Pin No.	Description
1	Gate 1 input positive
2	Gate 6 input positive
3	Gate 2 input positive
4	Gate 4 input positive
5	Gate 3 input positive
6	Gate 5 input positive
7	Conduction sensor phase A, positive, to M1
8	Conduction sensor phase B, positive, to M1
9	Conduction sensor phase C, positive, to M1
10	Alarm, positive, to M1
11	Fault, positive, to M1
12	Not Connected
13	Conduction sensor phase A, positive, to M2
14	Conduction sensor phase B, positive, to M2
15	Conduction sensor phase C, positive, to M2
16	Alarm, positive, to M2
17	Fault, positive, to M2
18	Not Connected
19	Not Connected
20	Gate 1 input negative
21	Gate 6 input negative
22	Gate 2 input negative
23	Gate 4 input negative
24	Gate 3 input negative
25	Gate 5 input negative
26	Conduction sensor phase A, negative, to M1
27	Conduction sensor phase B, negative, to M1
28	Conduction sensor phase C, negative, to M1
29	Alarm, negative, to M1
30	Fault, negative, to M1
31	Not Connected
32	Conduction sensor phase A, negative, to M2
33	Conduction sensor phase B, negative, to M2
34	Conduction sensor phase C, negative, to M2
35	Alarm, negative, to M2
36	Fault, negative, to M2
37	Not Connected
38	Capacitance to ground
39	Capacitance to ground

J9, J10, J11 Connector Pins (Conduction Sensors)

Connector	Pin No.	Description
J9	1	Power to sensor phase A
	2	Phase A current sensor input
	3	Power supply common
	4	Phase A current sensor input
J10	1	Power to sensor phase B
	2	Phase B current sensor input
	3	Power supply common
	4	Phase B current sensor input
J11	1	Power to sensor phase C
	2	Phase C current sensor input
	3	Power supply common
	4	Phase C current sensor input

J12, J13, J14, J20 Connector Pins

Connector	Pin No.	Description
J12 and J20	1	Power to fan sensor
	2	Power supply common
	3	Return from fan sensor
	4	Not Connected
J13	1	Not used
	2	Not used
	3	Not used
	4	Not used
	5	Voltage supply to thermistor (RTD) on bridge
	6	Current signal return from RTD
J14	1	Power-to-line filter fuse sensor (contact)
	2	Return from fuse sensor (contact)

LED Indicators (Refer to diagram below)

Designation	LED Color	Description
PSOK	Green	EHPA power on, power supply OK
GT1I	Yellow	Gate Pulse input 1 is Active
GT6I	Yellow	Gate Pulse input 6 is Active
GT2I	Yellow	Gate Pulse input 2 is Active
GT4I	Yellow	Gate Pulse input 4 is Active
GT3I	Yellow	Gate Pulse input 3 is Active
GT5I	Yellow	Gate Pulse input 5 is Active
ALRM	Yellow	Alarm condition feedback; blinking is normal
FAN	Red	Air flow sensor, flashing LED = Fan not running
FUSE	Red	Line filter sensor, flashing LED = Line filter fuse failed
TEMP	Red	RTD low temperature alarm, flashing = Alarm
FALT	Red	Bridge temperature fault, fan fault, and/or EHPA power failure
TFLT	Red	Temperature sensor or RTD high temperature alarm, flashing = Alarm
PHA	Yellow	Conduction sensor input, phase A
PHB	Yellow	Conduction sensor input, phase B
PHC	Yellow	Conduction sensor input, phase C
GT1O	Yellow	SCR gate pulse amplifier 1 is active
GT6O	Yellow	SCR gate pulse amplifier 6 is active
GT2O	Yellow	SCR gate pulse amplifier 2 is active
GT4O	Yellow	SCR gate pulse amplifier 4 is active
GT3O	Yellow	SCR gate pulse amplifier 3 is active
GT5O	Yellow	SCR gate pulse amplifier 5 is active

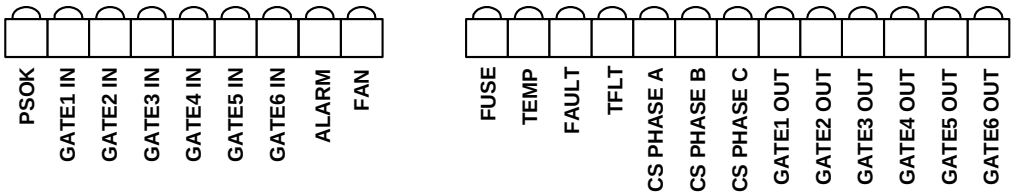

EX2100 Bridge Peephole

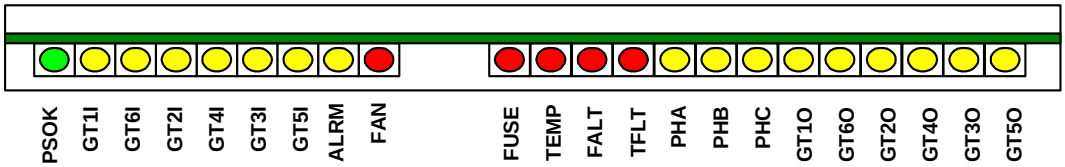

LED Indicators

Note Blinking of the red FAN LED when the bridge is not gating does not necessarily indicate a failure, but only that the fan is not running, or that the fan health is not known. Operation of the FAN LED is affected by the EHFC board, as described in GEI-100548.

Two brief flashes approximately every 10 seconds of the yellow ALRM LED are normal. Longer flashes during this interval indicate that an alarm is being reported to the control module. This alarm can be read in the control fault buffer.

Jumpers and Testpoints

Configure sensor inputs with jumpers as follows:

Jumper	Configuration	Description
JP2	Shorted	Enables fan 1 operation sensor (pulse train mode)
	Open	Disables fan 1 operation sensor (dry contact mode)
JP3	Shorted	Disables line filter fan sensor operation at J20
	Open	Enables line filter fan sensor operation at J20

Testpoint Descriptions

Testpoint	Nomenclature	Description
TP40	P1FA	Power supply input voltage
TP41	N50	Power supply, negative
TP42	P8	Power supply, 8 V dc
TP43	P40	Power supply, 40 V dc
TP44	PCOM	PCOM for 40 V dc power supply
TP45	P15	Power supply, +15 V dc
TP46	ACOM	ACOM for 15 V dc power supply
TP47	N15	Power supply, 15 V dc negative
TP48	DCOM	DCOM for 5 V dc power supply
TP49	P5	Power supply, 5 V dc
TP50	P12	Power supply, 12 V dc
TP51	PCOM	PCOM for 12 V power supply
TP54	LINFILN	Line filter sensor input, closed - High

Board Replacement

Handling Precautions

Caution

To prevent component damage caused by static electricity, treat all boards with static sensitive handling techniques. Wear a wrist-grounding strap when handling boards or components, but only after boards or components have been removed from potentially energized equipment and are at a normally grounded workstation.

Printed wiring boards may contain static-sensitive components. Therefore, GE ships all replacement boards in antistatic bags.

Use the following guidelines when handling boards:

- Store boards in antistatic bags or boxes.
- Use a grounding strap when handling boards or board components (per previous *Caution* criteria).

Replacement Procedures

EHPA is not online-maintainable unless the power converter section includes the online repair switch option. The bridge and EHPA power must be off before replacing EHPA.

Warning

To prevent electric shock, turn off power to the excitation system, then test to verify that no power exists in the board before touching it or any connected circuits.

Caution

To prevent equipment damage, do not remove, insert, or adjust board connections while power is applied to the equipment.

➢ **To replace the board**

Refer to GEH-6631, *Installation and Startup Guide, for complete de-energizing procedures and follow all local practices of lock-out/tag-out.*

1. Make sure that the excitation system or power converter section in which the board resides has been de-energized.
2. Open the Power Conversion Cabinet door and test any electrical circuits **before touching them** to ensure that power is off.
3. Verify that all EHPA LEDs are off.
4. Verify all EHPA cables are labeled with the correct connector name (as marked on the board) to simplify reconnection.
5. Carefully disconnect all cables from the EHPA board. If EHFC is present, refer to GEI-100548 for board procedures.

Caution

Avoid dropping any mounting hardware into the equipment as this could cause damage when power is reapplied.

6. Remove the EHPA board from its mounting.
7. Check the replacement EHPA board to verify that all jumpers are located in the correct positions (the same as on the original board).
8. Re-insert the replacement EHPA board on its mounting.
9. Reconnect all the cables removed in step 4, and tighten.

Renewal/Warranty Information

When ordering a replacement board for a GE excitation system, you need to know:

- How to accurately identify the part
- If the part is under warranty
- How to place the order

This information helps ensure that GE can process the order accurately and as soon as possible.

Board Identification

A printed wiring board is identified by an alphanumeric **part (catalog) number** located near its edge. *Board Part Number Conventions* explains the structure of the part number.

The board's functional acronym, shown below, is normally based on the **board description**, or name. For example, the EHPA board is described as the *Exciter Gate Pulse Amplifier Board.*

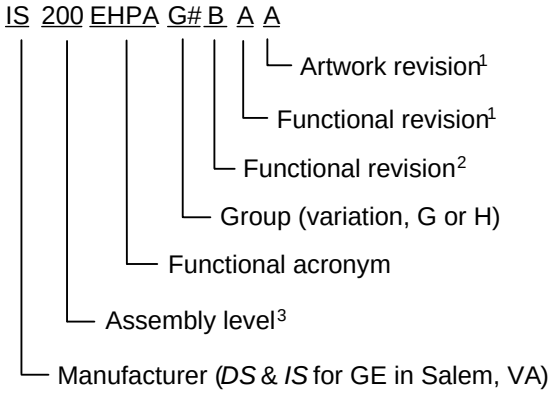

[1]Backward compatible
[2]Not backward compatible
[3]*200* indicates a base-level board; *215* indicates a higher-level assembly or added components (such as PROM)

Board Part Number Conventions

Warranty Terms

The GE *Terms and Conditions* brochure details product warranty information, including **warranty period** and **parts and service coverage**. The brochure is included with customer documentation. It may be obtained separately from the nearest GE Sales Office or authorized GE Sales Representative.

Placing the Order

"+" indicates the international access code required when calling from outside of the USA.

Parts still under **warranty** may be obtained directly from the factory:

GE Energy
Post Sales Service
1501 Roanoke Blvd.
Salem, VA 24153-6492 USA

Phone: 1 888 GE4 SERV (888 434 7378, United States)
+ 1 540 378 3280 (International)

Fax: + 1 540 387 8606 (All)

Renewals (spares or those not under warranty) should be ordered by contacting the nearest GE Sales or Service Office. Be sure to include:

- Complete part number and description
- Exciter serial number
- Exciter Material List (ML) number

Note All digits are important when ordering or replacing any board. The factory may substitute later versions of replacement boards based on availability and design enhancements. However, GE Energy ensures backward compatibility of replacement boards.

GE Energy
1502 Roanoke Blvd.
Salem, VA 24153-6492 USA

+1 540 387 7000
www.geenergy.com

GEI-100532B
Revised 060120
Issued 010215