GE Energy

GEI-100267B

Digital Signal Processor Control Board IS200DSPXH_A _D

Digital Processor

These instructions do not purport to cover all details or variations in equipment, nor to provide for every possible contingency to be met during installation, operation, and maintenance. The information is supplied for informational purposes only, and GE makes no warranty as to the accuracy of the information included herein. Changes, modifications, and/or improvements to equipment and specifications are made periodically and these changes may or may not be reflected herein. It is understood that GE may make changes, modifications, or improvements to the equipment referenced herein or to the document itself at any time. This document is intended for trained personnel familiar with the GE products referenced herein.

GE may have patents or pending patent applications covering subject matter in this document. The furnishing of this document does not provide any license whatsoever to any of these patents. All license inquiries should be directed to the address below. If further information is desired, or if particular problems arise that are not covered sufficiently for the purchaser's purpose, the matter should be referred to:

GE Energy
Post Sales Service
1501 Roanoke Blvd.
Salem, VA 24153-6492 USA

Phone: 1 888 GE4 SERV (888 434 7378, United States)
+ 1 540 378 3280 (International)

Fax: + 1 540 387 8606 (All)

("+" indicates the international access code required when calling from outside the USA)

This document contains proprietary information of General Electric Company, USA and is furnished to its customer solely to assist that customer in the installation, testing, operation, and/or maintenance of the equipment described. This document shall not be reproduced in whole or in part nor shall its contents be disclosed to any third party without the written approval of GE Industrial Systems.

Mr. Lucian
Sales manager

Joyoung International Trading Co., Ltd
Whatsapp/Wechat: +86 18106906650
Email: Lily@htechplc.com
Mobile: +86 18106906650
Website: www.xm-dcs.com
Address: Room 1503, Building B, Diamond Coast,
No. 96 Lujiang Road, Siming District, Xiamen Fujian

Wechat

Warning **Indicates a procedure, practice, condition, or statement that, if not strictly observed, could result in personal injury or death.**

Caution **Indicates a procedure or condition that, if not strictly observed, could result in damage to or destruction of equipment.**

Note Indicates an essential or important procedure or statement.

Section ***Page***

Functional Description 3
Standard Hardware Features 4
Specialized Hardware Functions 4
Onboard Firmware 6
Application Data 6
Indicating Lights 6
I/O Definitions 6
Board Replacement 15
Handling Precautions 15
For Innovation Series Drives 15
For Excitation Control (Offline) 16
For Excitation Control (Online) 17
Renewal/Warranty Information 18
Board Identification 18
Warranty Terms 19
Placing the Order 20

Functional Description

The IS200DSPX Digital Signal Processor Control Board (DSPX) is the primary controller for the bridge and motor regulator and gating functions for Innovation Series™ drives. It also controls generator field control functions for the EX2100™ Excitation Control. The board provides logic, processing, and interface functions.

The DSPX board includes a high performance digital signal processor (DSP), standard memory components, and an application specific integrated circuit (ASIC) that performs custom logic functions, as shown below.

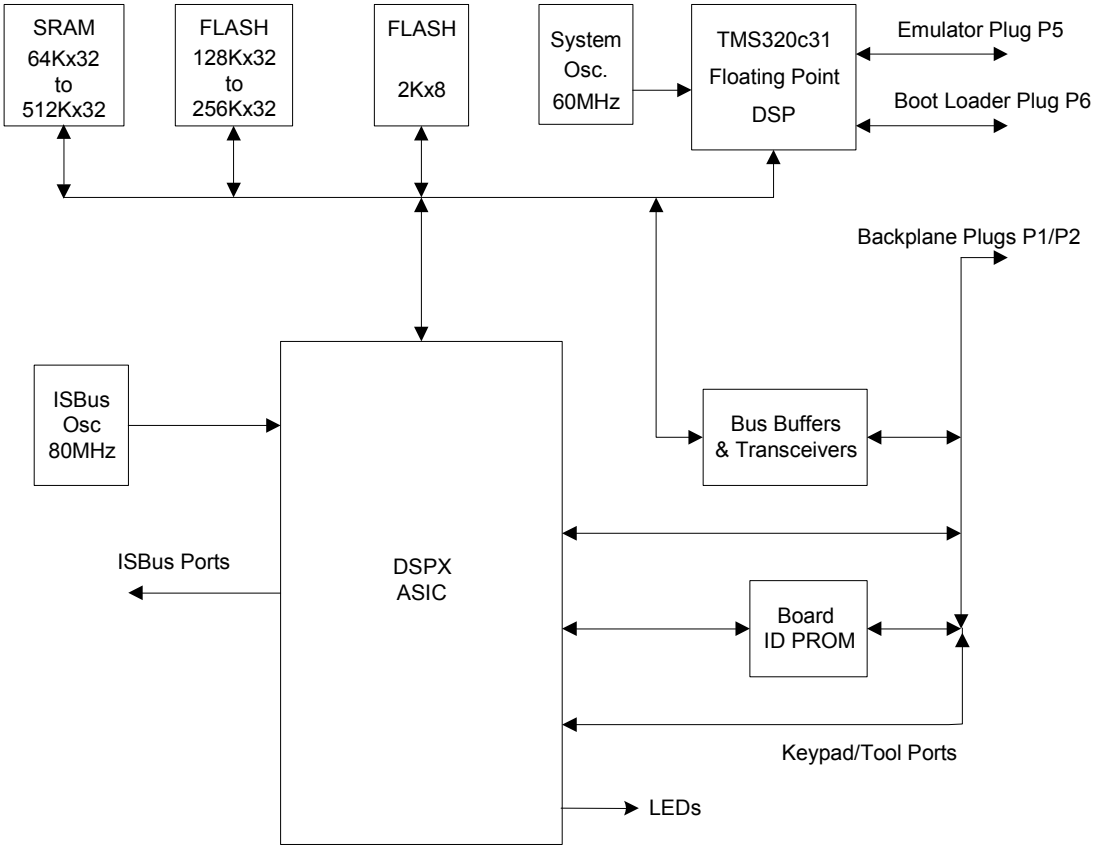

DSPX Board Block Diagram

There are several variations of the DSPX board. Refer to the section, *Board Identification,* for details.

Standard Hardware Features

Refer to Figure 2.

The DSPX's Digital Signal Processor (DSP) runs at 60 MHz. Four external interrupts to the DSP are provided during normal operation:

- Stack overflow (INT0)
- Inner loop load pulse (INT1)
- Two configurable inputs (INT2, INT3)

The following types of memory are provided on the DSPX board:

- FLASH memory for DSP boot images, code execution, and configurable item storage, along with system history records
- RAM for data storage and code execution
- NVRAM for nonvolatile data storage
- Add-only memory for board revision identification

Specialized Hardware Functions

An ASIC revision identification register that is readable by the DSP is provided.

Specialized functions of the DSPX board are provided through custom logic in Field Programmable Gate Arrays (FPGA) or ASICs with supporting circuits as required. Most specialized and support functions are contained in a single ASIC. Refer to the following figure, *DSPX Board ASIC Block Diagram*.

Four serial interfaces to P1 are provided as follows:

- Two five Mb/s ISBus™ interfaces used as either master or slave
- One asynchronous TTL interface for a pc-based configuration tool, including RX, TX, and TXEN/RTS data signals
- One asynchronous TTL interface to a programmer board, including RX, TX, and RTS data signals

Synchronizing *load pulse* signals perform the following functions:

- An inner loop load pulse signal captures the values of I/O such as bridge, motor, or generator voltages and current VCOs, tachometer counters, and discrete inputs. It can also synchronize the ISBus channels, the software, and gating outputs to bridges.
- At a sub-multiple or multiple of the inner loop load pulse, an application loop load pulse signal is used to capture values of other application VCOs and optionally the tachs.

Note To facilitate firmware synchronizing of the load pulse signals, a 6-bit register increments on each inner loop load pulse and resets on each application loop load pulse.

Stack overflow detection is provided for both the foreground stack (from internal memory) and the background stack (from external SRAM). Interrupt INT0 is generated if either stack overflows. If both stacks overflow, a hard reset is generated. A configuration register is provided to allow the stack overflow reset to be disabled.

A watchdog timer is enabled and periodically toggled by the DSP (toggle interval is configurable). A time-out of the watchdog timer will generate a hard reset. A 24-bit free running timer is also provided and used as a reference for certain functions.

A marker pulse is used to latch or reset the up/down counter.

Five differential (HIFI) pair application inputs may be used as two quadrature incremental tach interfaces (one with marker capability). The signals drive two 16-bit up/down counters. It maintains its present state when the inputs are at the same level, and changes state when the inputs are differentially opposite.

A five MHz timer resets each time the counter increments or decrements, and a state register records the direction of the last count. Associated with each of these counters, timers, and registers is a capture register that can be configured to capture the values on the occurrence of either the inner loop load pulse or the application loop load pulse.

The five differential HIFI inputs can be used as application layer VCO counters or single-channel tach interfaces. Five 16-bit counters increment on the differentially decoded and filtered inputs. These counter values are captured into registers the DSP can read by the application loop load pulse.

The five differential HIFI inputs can also be used as up to ten discrete inputs. Each input is filtered for three system clock cycles and directly readable by the DSP in a buffer.

Miscellaneous expansion board I/O (SYNC_OUT) is provided for synchronizing functions at the BIC_ board layer.

Six inputs from the backplane are digitally filtered and input to the VCO counters. These are 16-bit counters with capture registers latched by the inner loop load pulse and readable by the DSP. The inputs come from technology specific I/O cards such as BIC (bridge interface) or exciter interface cards.

Two PWM outputs are provided. These outputs are at 24 kHz fixed frequency with 10-bit resolution each and occupy one 20-bit register. These can be used to drive instrumentation meters or other outputs.

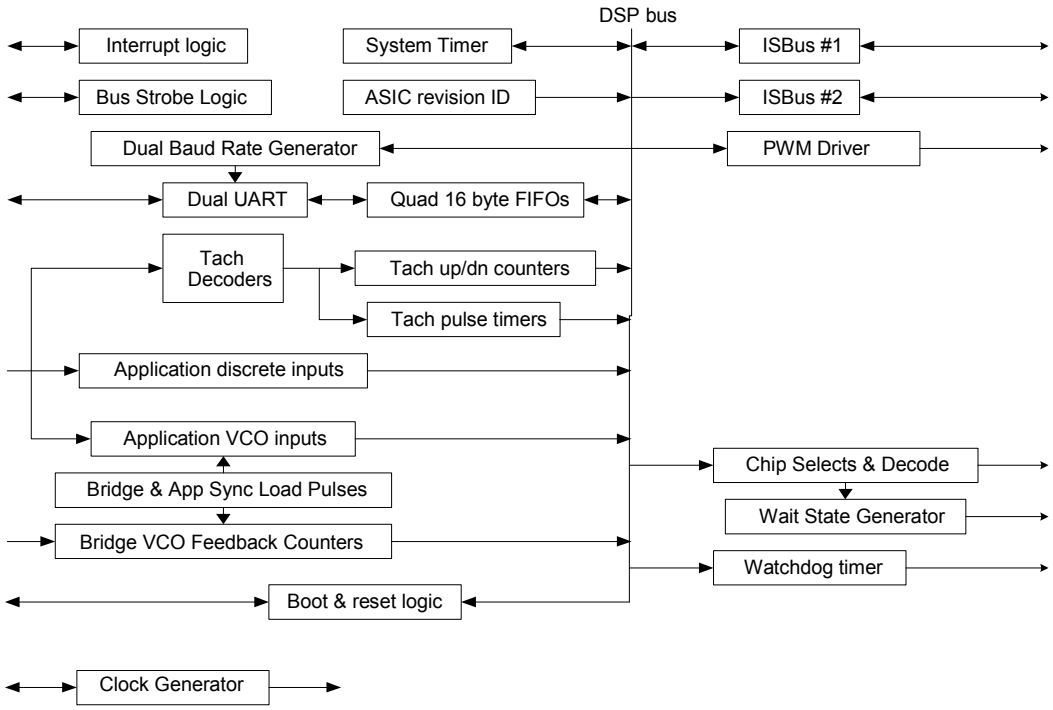

DSPX Board ASIC Block Diagram

Onboard Firmware

Onboard firmware is stored in Flash memory. There are three main types:

- Boot loader controls the power up sequence and should not be reloaded in the field.
- Application code defines the specific control functions for the drive or exciter product. This code is loaded through the Tool port on the exciter.
- Configuration parameters are loaded using the toolbox. Exciter parameters are loaded over the Unit Data Highway. Drive parameters are loaded through a serial port, ISBus, or Ethernet to ACL_, if applicable.

Application Data

The DSPX has no fuses, adjustable hardware devices, or user testpoints.

The DSPX board is mounted in the board rack and connects to the backplane through a 4-row, 128-pin DIN connector (P1). In the EX2100, the DSPX is attached to another board, the EISB. These two boards can be detached if required, refer to the section, *How To Replace The Board*.

Refer to the following figures for the board layout.

Indicating Lights

The DSPX includes two LEDs on its front panel.

LED	Nomenclature	Color	Description
DS1	FAULT	Red	Fault LED driven by the DSP ON or flashing: A fault has occurred or during reset OFF: No faults are present
DS2	STATUS	Green	Status monitor LED driven by the DSP Flashing: Running ON: Stopped OFF: A fault has occurred or during reset

I/O Definitions

The DSPX includes three I/O connectors as follows:

- P1 backplane connector
- P5 DSP emulator port
- P6 engineering monitor port

The 5 V power supply input (P5, –2%/+5%) is also through P1.

The P1 connector provides memory mapped process bus address space with four chip select signals to support interfaces to bridge and customer input/output (I/O). It also contains individual controls for a standard UART serial interface to a programmer board and a configuration tool, and two additional ISBus proprietary serial interfaces, for Application Control Layer (ACL) or local expansion functions.

The P5 emulator port (located on the board front panel) provides an interface to the TI emulator port. It provides a scan interface (similar to JTAG) to allow emulation as well as FLASH programming.

The P6 engineering monitor port (located on the board front panel) connects to the DSP synchronous serial port (at TTL levels) and allows connection to a terminal for GE engineering use only.

Note The P6 and P7 test point ports (located on the board surface) are for test/development use only.

Refer to the following tables for pin signal descriptions.

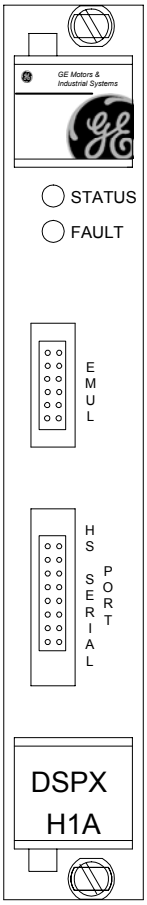

DSPX Board Front Panel (H1A, H1B, H1C, H10, H2B, H2C ,or H20)

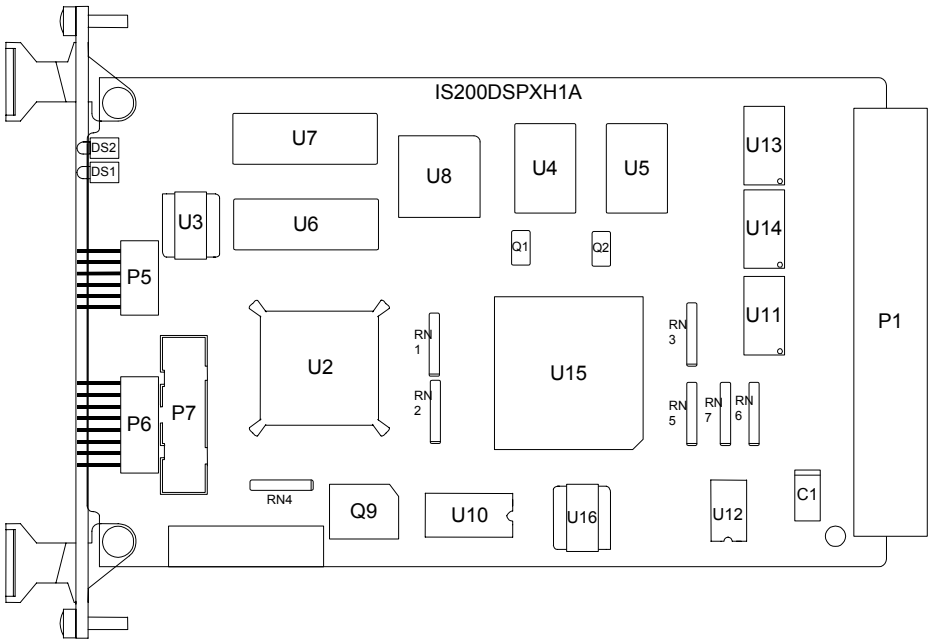

DSPX Board Layout

P1 Backplane Connector Pin Signal Functions

Quantity of Pins	Function
32	Data Bus
14	DSP Address Bus
2	Bus control output signals (ORD, OWR)
4	Backplane chip select outputs (BIC_, LAN, IO, SPR)
1	Ready/busy handshake input to DSPX wait state logic
4	Clock signal outputs (2–30 MHz CPU_CLK, 2–20 MHz CLK 20)
4	Interrupt inputs
1	Board identification input (serial ID LAN)
1	Hard reset input (triggers a system reset), 0 true
6	0-2MHz bridge VCO inputs (current and voltage feedbacks)
4	2 ISBus serial channels, TX, RX
3	Load pulse outputs
3	Keypad interface
3	Tool interface
1	BIC_ disable output (tells BIC_ to turn off power during power-up). High disables
10	HIFI application inputs (5 VCOs, 2 tachs/1 marker, or 10 discrete inputs)
2	Meter PWM outputs
1	SYNC_LAN, output for LAN synchronization
8	P5 supply to DSPX
16	DCOM power supply return
4	Reserved (ACOM, P15, N15)
5	Unused

P1 Backplane Connector Pin Signal Descriptions, Row A

Pin No.	Input/Output	Nomenclature	Description
1	I	P5	P5 supply to DSPX board
2	I/O	D0	Data bus, bit 0
3	I/O	D4	Data bus, bit 4
4	Return	DCOM	Dc power supply return
5	I/O	D8	Data bus, bit 8
6	I/O	D12	Data bus, bit 12
7	I/O	D16	Data bus, bit 16
8	I/O	D20	Data bus, bit 20
9	I/O	D24	Data bus, bit 24
10	I/O	D28	Data bus, bit 28
11	I/O	A0	Address bus, bit 0
12	Return	DCOM	Dc power supply return
13	I/O	A4	Address bus, bit 4
14	I/O	A8	Address bus, bit 8
15	I/O	A12	Address bus, bit 12
16	O	0CS_BIC	BIC_ board select signal
17	O	0CS_IO	I/O board select signal
18	O	0CS_LAN	LAN select signal
19	O	0CS_SPR	Spare board select signal
20	Return	DCOM	Dc power supply return
21	I	0RESET	Reset signal
22	------	Reserved	------
23	I	HIFI_2P	Differential input pin 2, positive
24	I	HIFI_4P	Differential input pin 4, positive
25		HIFI_4N	Differential input pin 4, negative
26	I	VCO_1	Bridge VCO_1
27	I	VCO_5	Bridge VCO_5
28	Return	DCOM	Dc power supply return
29	O	GR2_TX	ISBus serial transmit
30	O	KYPD_TX	Key pad transmit
31	O	MTR1_PWM	PWM (Meter) output 1
32	I	P5	P5 supply to DSPX board

P1 Backplane Connector Pin Signal Descriptions, Row B

Pin No.	Input/Output	Nomenclature	Description
1	I	P5	P5 supply to DSPX board
2	I/O	D1	Data bus, bit 1
3	I/O	D5	Data bus, bit 5
4	I/O	D9	Data bus, bit 9
5	I/O	D13	Data bus, bit 13
6	I/O	D17	Data bus, bit 17
7	I/O	D21	Data bus, bit 21
8	Return	DCOM	Dc power supply return
9	I/O	D25	Data bus, bit 25
10	I/O	D29	Data bus, bit 29
11	I/O	A1	Address bus, bit 1
12	I/O	A5	Address bus, bit 5
13	I/O	A9	Address bus, bit 9
14	Return	DCOM	Dc power supply return
15	I/O	A13	Address bus, bit 13
16	------	Unused	------
17	O	CPU_CLK2	CPU_CLK2 output
18	Return	DCOM	Dc power supply return
19	O	CLKTO	CLKTO output
20	O	CLKT1	CLKT1 output
21	Return	ACOM	Analog power supply return
22	I	HIFI_1P	Differential pin 1, positive
23	I	HIFI_2N	Differential pin 2, negative
24	Return	DCOM	Dc power supply return
25	O	CLK20_2	CLK20_2 output
26	I	VCO_2	Bridge VCO_2
27	I	VCO_6	Bridge VCO_6
28	I	GR2_RX	ISBus serial receiver
29	------	Unused	------
30	I	KYPD_RX	Keypad receiver
31	O	MTR2_PWM	PWM (Meter) 2 output
32	I	P5	P5 supply to DSPX board

P1 Backplane Connector Pin Signal Descriptions, Row C

Pin No.	Input/Output	Nomenclature	Description
1	I	P5	P5 supply to DSPX board
2	I/O	D2	Data bus, bit 2
3	I/O	D6	Data bus, bit 6
4	I/O	D10	Data bus, bit 10
5	I/O	D14	Data bus, bit 14
6	I/O	D18	Data bus, bit 18
7	I/O	D22	Data bus, bit 22
8	Return	DCOM	Dc power supply return
9	I/O	D26	Data bus, bit 26
10	I/O	D30	Data bus, bit 30
11	I/O	A2	Address bus, bit 2
12	I/O	A6	Address bus, bit 6
13	I/O	A10	Address bus, bit 10
14	Return	DCOM	Dc power supply return
15	O	OBUS_RD	Bus read output
16	I	INT_BIC	Interrupt input
17	O	CPU_CLK1	CPU_CLK1 output
18	Return	DCOM	Dc power supply return
19	O	CLKT2	Clock signal
20	O	SYNC_LAN	LAN synchronization
21	Return	ACOM	Analog return
22	I	HIFI_1N	HIFI applications input, pair 1, negative
23	I	HIFI_3P	HIFI applications input, pair 3, positive
24	Return	DCOM	Dc power supply return
25	O	CLK20_1	CLK20_1 output
26	I	VCO_3	0–2 MHz bridge VCO inputs
27	I	GR1_RX	ISBus serial interface receive
28	------	Unused	------
29	O	TOOL_TX	Tool, transmitter
30	O	KYPD_RTS	Keypad interface
31	------	Unused	------
32	I	P5	P5 supply to DSPX board

P1 Backplane Connector Pin Signal Descriptions, Row D

Pin No.	Input/Output	Nomenclature	Description
1	I	P5	P5 supply to DSPX board
2	I/O	D3	Data bus, bit 3
3	I/O	D7	Data bus, bit 7
4	Return	DCOM	Dc power supply return
5	I/O	D11	Data bus, bit 11
6	I/O	D15	Data bus, bit 15
7	I/O	D19	Data bus, bit 19
8	I/O	D23	Data bus, bit 23
9	I/O	D27	Data bus, bit 27
10	I/O	D31	Data bus, bit 31
11	I/O	A3	Address bus, bit 3
12	Return	DCOM	Dc power supply return
13	I/O	A7	Address bus, bit 7
14	I/O	A11	Address bus, bit 11
15	O	0BUS_WR	Bus write
16	I	0BUSY	Busy handshake input to DSPX board wait state logic
17	I	INT_IO	Interrupt
18	I	INT_LAN	LAN Interrupt
19	I	BRD_ID	Board identification input
20	Return	DCOM	Dc power supply return
21	O	BIC_DISABL	Disable output
22	------	Reserved	------
23	I	HIFI_3N	HIFI application input, pair 3, negative
24	I	HIFI_5P	HIFI application input, pair 5, positive
25	I	HIFI_5N	HIFI application input, pair 5, negative
26	I	VCO_4	Bridge VCO input
27	O	GR1_TX	ISBus serial transmitter
28	Return	DCOM	Dc power supply return
29	I	TOOL_RX	Tool receive
30	O	TOOL_TXEN	Tool transmitter enable
31	------	Unused	------
32	I	P5	P5 supply to DSPX board

P5 Connector, DSP Emulator Port Pin Descriptions

Pin No.	Input/Output	Nomenclature	Description
1-3	Return	DCOM	Dc power supply return
4	------	Removed for TI key	------
5,6	Return	DCOM	Dc power supply return
7-9	I	EMU1	Emulator point interface
10	I	P5	P5 supply to DSPX board
11	I	EMU3	Emulator point interface
12	O	H3 (DSP clock output)	30 MHz Clock DSP processor output

P6 Connector, Boot Loader Serial Port Pin Descriptions

Pin No.	Input/Output	Nomenclature	Description
1	I	P5	P5 supply to DSPX board
2	O	DX0	Data transmit output
3	Return	DCOM	Dc power supply return
4	O	FSX0	Frame synchronization pulse for transmit. The FSX0 pulse initiates the transmit data process over pin DX0.
5	Return	DCOM	Dc power supply return
6	O	CLKX0	Transmit clock. Serves as the serial shift clock.
7	Return	DCOM	Dc power supply return
8	I	SERBOOT	Boot from serial port
9	O	C31_XF0	External flag pin
10	Return	DCOM	Dc power supply return
11	I	CLKR0	Receive clock. Serves as the serial shift clock.
12	Return	DCOM	Dc power supply return
13	I	FSR0	Frame synchronization pulse for receive. The FSR0 pulse initiates the receive data process over pin DR0.
14	Return	DCOM	Dc power supply return
15	I	DR0	Data receive
16	I	P5	P5 supply to DSPX board

Board Replacement

Handling Precautions

Caution

To prevent component damage caused by static electricity, treat all boards with static sensitive handling techniques. Wear a wrist-grounding strap when handling boards or components, but only after boards or components have been removed from potentially energized equipment and are at a normally grounded workstation.

Printed wiring boards may contain static-sensitive components. Therefore, GE ships all replacement boards in anti-static bags. Use the following guidelines when handling boards:

- Store boards in anti-static bags or boxes.
- Use a grounding strap when handling boards or board components.

For Innovation Series Drives

Warning

To prevent electric shock, turn off power to the board, then test to verify that no power exists in the board before touching it or any connected circuits.

Caution

To prevent equipment damage, do not remove, insert, or adjust board connections while power is applied to the equipment.

➢ ***To remove the board from the rack***

1. Make sure that the drive in which the board resides has been de-energized.
2. Open the drive's cabinet door, and using equipment designed for high voltages, test any electrical circuits *before touching them* to ensure that power is off.
3. Carefully remove the board from the rack, as follows:
   a. Loosen the screws at the top and bottom of the board, near the board ejector tabs. (The screws are captive in the board front and should not be removed.)
   b. Unseat the board by raising each ejector tab.
   c. Using both hands, gently pull the board from the bus rack.

➢ ***To replace the board***

1. Slide the board into the *correct slot* in the rack.

Caution

Because boards are keyed for specific rack slots, inserting the DSPX into the wrong slot can damage the electronics.

2. Begin seating the board by firmly pressing the top and bottom of the board at the same time with your thumbs.
3. Finish seating the board in the slot by starting and then tightening the screws at the top and bottom of the board. Tighten the screws evenly to ensure that the board is seated squarely.

For Excitation Control (Offline)

Warning

To prevent electric shock, turn off power to the exciter, then test to verify that no power exists in the board before touching it or any connected circuits. There are special procedures for online repair, see the section, For Redundant Exciters (Online).

Caution

To prevent equipment damage, do not remove, insert, or adjust board connections while power is applied to the equipment.

➢ **To replace the board offline**

Refer to GEH-6631, EX2100 Thyristor Control 77, 53, and 42mm Installation and Startup Guide or GEH-6674, EX2100 Regulator Control Installation and Startup Guide for complete de-energizing procedures and follow all local practices of lock-out/tag-out.

1. Make sure that the exciter has been de-energized.
2. Open the control cabinet door and check that the power indicators on the EPDM (if present) and EPSM power supplies are off, and the LEDs on the DSPX are off.
3. Disconnect the six fiber-optic cables from the EISB front panel.
4. Carefully remove the DSPX board and the attached EISB board underneath from the control rack, as follows:

a. Loosen the screws at the top of the DSPX faceplate and the bottom of the EISB faceplate, near the ejector tabs. (The screws are captive in the faceplate and should not be removed.)

b. Unseat the DSPX and EISB by raising the ejector tabs.

c. Using both hands, gently pull both boards from the rack.

5. Remove the EISB from the bottom of the DSPX, and attach it to the replacement DSPX.

Caution

Because boards are keyed for specific rack slots, inserting the DSPX into the wrong slot can damage the electronics.

6. Slide the replacement DSPX and EISB board into the correct slot in the rack.
7. Begin seating the board by firmly pressing the top and bottom of the faceplates at the same time with your thumbs.
8. Finish seating the module in the slot by starting and then alternately tightening the screws at the top and bottom of the faceplate assembly. Tighten the screws evenly to ensure that the module is seated squarely.
9. Reconnect all communication cables that were disconnected when the old module was removed.

Note After the DSPX is replaced, it must be reconfigured. Refer to the *GE Control Systems Toolbox (toolbox)* for the required procedures.

For Excitation Control (Online)

For a **redundant** control system, it is possible to replace the failed DSPX while the exciter is running. You have the option to leave the failed DSPX in place, and let the exciter run on the remaining controller. However, in the unlikely event of a second board failure in another controller, the exciter will shut down.

➢ To replace the board in a redundant control online

1. Open the control cabinet door and confirm the failed DSPX from the indicators on the front of the board.

Warning

Care should be taken in replacing the board since the other controllers, power supplies, and terminal boards are still energized and active.

2. De-energize the section of the control rack containing the DSPX to be replaced, either controller M1, M2, or C, following the procedure for the specific EX2100 type being serviced. Check that the LED indicators on the appropriate section of the EPSM are off.
3. Check the controller LEDs to confirm that control is transferred to the other master. Check that all the power indicators on the boards in the control rack containing the DSPX to be replaced are off before touching the DSPX or any connected circuits.
4. Disconnect the fiber-optic communication cables from the EISB front panel.
5. Carefully remove the DSPX board and the attached EISB board from the control rack as follows:
   a. Loosen the screws at the top of the DSPX faceplate and the bottom of the EISB faceplate, near the ejector tabs. (The screws are captive in the faceplate and should not be removed.)
   b. Unseat the DSPX and attached EISB by raising the ejector tabs.
   c. Using both hands, gently pull both boards from the rack.

6. Remove the EISB from the bottom of the DSPX, and attach it to the replacement DSPX.
7. Slide the replacement DSPX board and EISB board into the correct slot in the rack.
8. Begin seating the board by firmly pressing the top and bottom of the faceplates at the same time with your thumbs.
9. Finish seating the module in the slot by starting and then alternately tightening the screws at the top and bottom of the faceplate assembly. Tighten the screws evenly to ensure that the module is seated squarely.

The replaced DSPX can be tested by transferring control from the active master to the inactive master and observing correct operation

10. Apply power to the appropriate section of the control rack from the EPDM, and check that the LED power indicators on the EPDM and EPSM come on. Check that the green power LEDs on the adjacent controller boards come on.
11. Reconnect all communication cables that were disconnected when the old module was removed.

Note After the DSPX is replaced, it must be reconfigured. Refer to the GE Control Systems Toolbox (toolbox) for the required procedures.

Renewal/Warranty Information

When ordering a replacement board for a GE drive or exciter, you need to know:

- How to accurately identify the part
- If the part is under warranty
- How to place the order

This information helps ensure that GE can process the order accurately and as soon as possible.

Board Identification

A printed wiring board is identified by an alphanumeric *part (catalog) number* located near its edge. *Board Part Number Conventions* explains the structure of the part number.

The board's functional acronym is normally based on the *board description*, or name. For example, the *DSPX* board is described as the *Digital Signal Processor Control Board*.

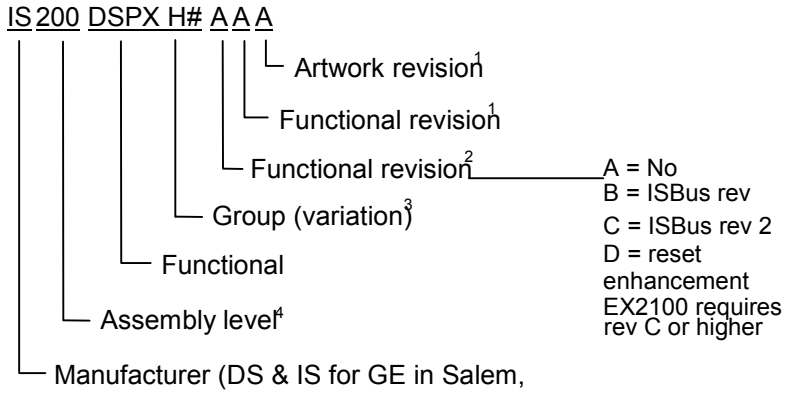

[1]Backward
[2]Not backward
[3]*G* = normal coating; *H* = conformal
[4]*200* indicates a base-level *215* indicates a higher-level assembly or added components as PROM)

Board Part Number Conventions

Warranty Terms

The GE *Terms and Conditions* brochure details product warranty information, including *warranty period* and *parts and service coverage*. The brochure is included with customer documentation. It may be obtained separately from the nearest GE Sales Office or authorized GE Sales Representative.

Placing the Order

Parts still under **warranty** may be obtained directly from the factory:

"+" indicates the international access code required when calling from outside of the USA.

GE Energy
Product Service Engineering
1501 Roanoke Blvd.
Salem, VA 24153-6492 USA

Phone: 1 888 GE4 SERV (888 434 7378, United States)
+ 1 540 378 3280 (International)

Fax: + 1 540 387 8606 (All)

Renewals (spares or those not under warranty) should be ordered by contacting the nearest GE Sales or Service Office. Be sure to include:

- Complete part number and description
- Drive or exciter serial number
- Drive or Exciter Material List (ML) number

Note All digits are important when ordering or replacing any board. The factory may substitute later versions of boards based on availability and design enhancements. However, GE Energy ensures backward compatibility of replacement boards

GE Energy

General Electric Company
1501 Roanoke Blvd.
Salem, VA 24153-6492 USA

1 540 387 7000
www.geenergy.com

GEI-100267
050224