DRLY Simplex Relay Output

Functional Description

The Simplex Relay Output (DRLY) terminal board is a compact relay output terminal board designed for wall mounting (not DIN-rail mounting). The board has 12 form-C dry contact output relays and connects to the VCCC, VCRC, or VTUR processor board with a single cable. The 37-pin cable connector is identical to those used on the larger TRLY terminal board. Two DRLY boards can be connected to VCCC, VCRC, or VTUR for a total of 24 contact outputs. Only a simplex version of this board is available.

There are two versions of the DRLY terminal board:

- H1A has higher powered relay contacts than H1B.
- H1B is suitable for use in UL listing for Class I, Division 2 Hazardous (classified) locations.

Note DRLY does not work with the PDOA I/O Pack.

Mr. Lucian
Sales manager
Joyoung International Trading Co., Ltd
Whatsapp/Wechat: +86 18106906650
Email: Lily@htechplc.com
Mobile: +86 18106906650
Website: www.xm-dcs.com
Address: Room 1503, Building B, Diamond Coast,
No. 96 Lujiang Road, Siming District, Xiamen Fujian
Wechat

Installation

Note DLRY does not have a shield terminal strip.

Mount the DRLY board by fastening screws to wall through the four mounting holes in the corners of metal support plate. Connect the wires for the 12 relay outputs directly to the odd-numbered screws on the terminal blocks. The high-density Euro-Block type terminal blocks plug into the numbered receptacles on the board. The two screws on TB2 are provided for the SCOM (chassis ground) connection, which should be as short a distance as possible.

Note SCOM, TB2, must be connected to chassis ground.

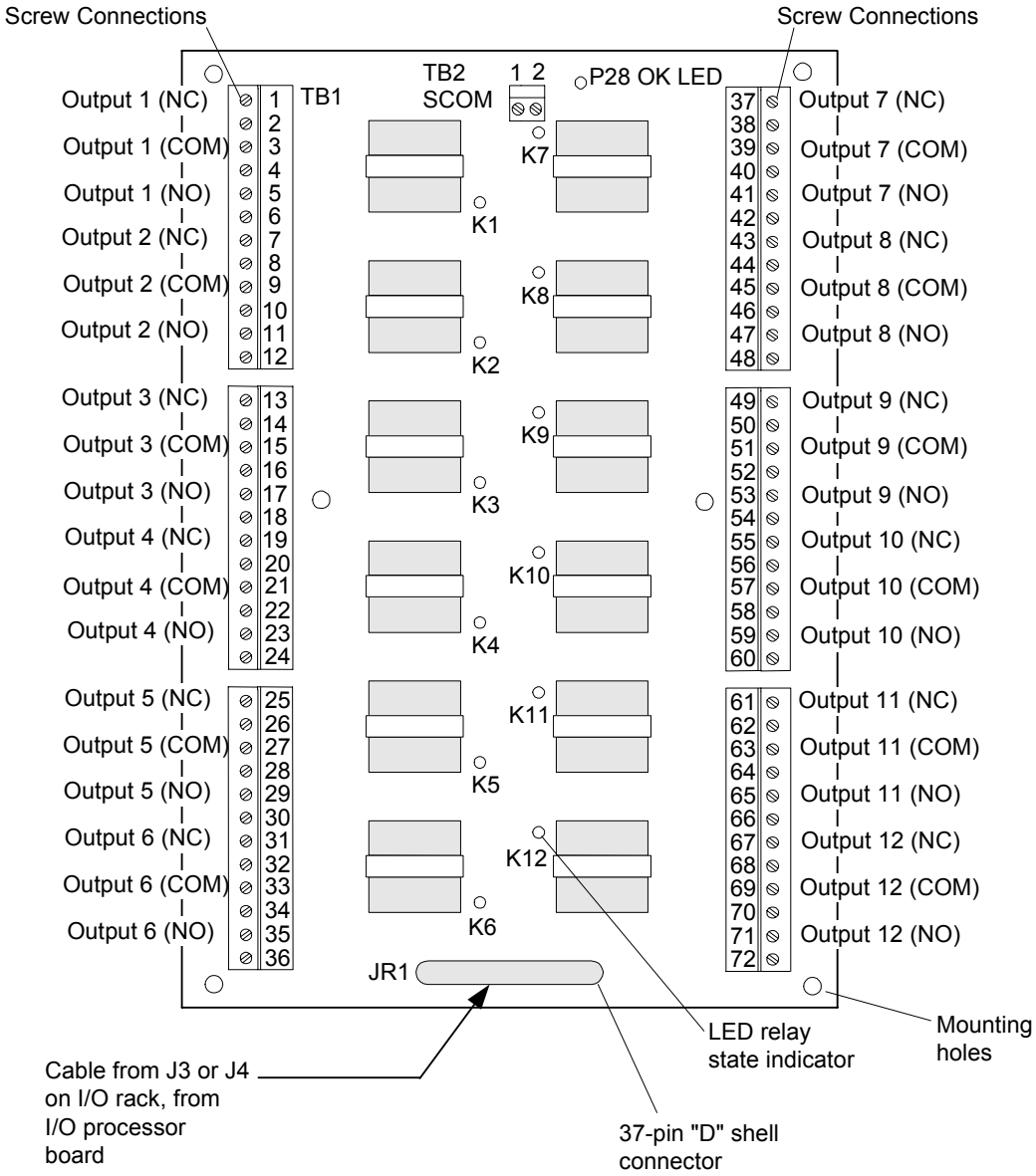

DRLY Wiring and Cabling

Operation

DRLY does not include solenoid source power. There is one set of dry contacts per relay, with two NO contacts in series. Unlike TRLY, there is no on-board suppression, and no relay state monitoring. The I/O board (VCCC, VCRC, or VTUR) provides the 28 V dc power for the relay coils, which is indicated with a green LED. DRLY has a yellow LED for each relay that indicates voltage across the coil. With an unconnected control cable, the relays default to a de-energized state.

Note Three relays on DRLY can be controlled by VTUR using the DTRT transition board. Six relays can be controlled if two DTURs are used.

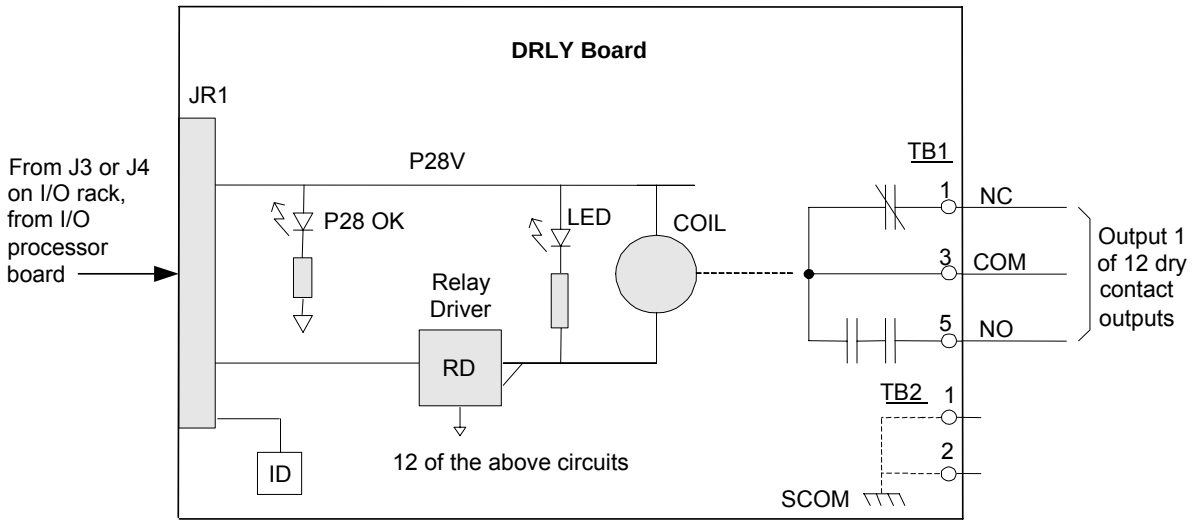

DRLY Board Circuits

DRLYH1A Specifications

Item	Specification			
Number of relay outputs and type	12 relays, nominal 24 V dc coil. Two-pole double throw with Form C contacts containing two NO and 2 NC contacts			
Relay contact rating	Resistive:		Inductive:	
	28 V dc:	10 A	28 V dc:	2 A, L/R = 7 ms, without suppression
	120 V ac:	10 A	120 V ac:	2 A, PF= 0.4, 10 A inrush, no suppression Motor load 1/3 Hp.
	240 V ac:	3 A	240 V ac:	2 A, PF= 0.4, 10 A inrush, no suppression Motor load ½ Hp.
	125 V dc:	0.5 A	125 V dc:	0.2 A, L/R = 7 ms without suppression
			125 V dc:	0.65 A, L/R = 150 ms, MOV suppression by others (with two contacts in series on the same relay)
Suppression	External suppression will be supplied by customer			
Relay response time	Operate: 15 ms typical			
	Release: 10 ms typical			
Fault detection in I/O board	The state of the P28 V dc is monitored using a green LED at the top of the board. Voltage across each relay coil is indicated with a yellow LED. There is no relay state monitoring in the VCCC or VCRC			
Physical				
Size	21.59 cm long x 20.57 cm wide (8.5 in x 8.1 in wide)			
Temperature	0 to 60ºC (32 to 140 ºF)			

DRLYH1B Specifications

Item	Specification
Number of relay outputs	12 relays, nominal 24 V dc coil
Relay type	Two-pole double throw with Form C contacts containing two NO and 2 NC contacts. UL listed, CSA certified, sealed to UL 1604
Relay contact rating (resistive load)	28 V dc: 2 A Max operating voltage: 250 V rms, 220 V dc
	125 V dc: 0.5 A Max operating current: 2 A dc, 1 A rms
	120 V ac: 1 A Max switching capacity: 125 VA, 60 W
	240 V ac: 0.5 A
Suppression	External suppression will be supplied by customer
Relay response time	Operate: 3 ms typical
	Release: 2 ms typical
Fault detection in I/O board	The state of the P28 V dc is monitored using a green LED at the top of the board
	Voltage across each relay coil is indicated with a yellow LED
	There is no relay state monitoring in the I/O board
Agency requirements	UL listed Class I, Division. 2 applications, CSA, and CE, also approvals listed in table above for TRLYH1A
Physical	
Size	21.59 cm long x 20.57 cm wide, (8.5 in x 8.1 in)
Temperature	0 to 75ºC (32 to 167 ºF)

Diagnostics

The board contains the following diagnostics; there is no relay state monitoring.

- The terminal board connector has an ID device that is interrogated by the I/O board. The connector ID is coded into a read-only chip containing the board serial number, board type, and revision number. When this chip is read by VCCC/VCRC or VTUR and a mismatch is encountered, a hardware incompatibility fault is created.
- The voltage across each relay coil is indicated with a yellow LED.
- The 28 V supply to the board is indicated with a green LED.

Configuration

There are no jumpers or hardware settings on the board.

DRLY Simplex Relay Output

Functional Description

The Simplex Relay Output (DRLY) terminal board is a compact relay output terminal board designed for wall mounting (not DIN-rail mounting). The board has 12 form-C dry contact output relays and connects to the VCCC, VCRC, or VTUR processor board with a single cable. The 37-pin cable connector is identical to those used on the larger TRLY terminal board. Two DRLY boards can be connected to VCCC, VCRC, or VTUR for a total of 24 contact outputs. Only a simplex version of this board is available.

There are two versions of the DRLY terminal board:

- H1A has higher powered relay contacts than H1B.
- H1B is suitable for use in UL listing for Class I, Division 2 Hazardous (classified) locations.

Note DRLY does not work with the PDOA I/O Pack.

Installation

Note DLRY does not have a shield terminal strip.

Mount the DRLY board by fastening screws to wall through the four mounting holes in the corners of metal support plate. Connect the wires for the 12 relay outputs directly to the odd-numbered screws on the terminal blocks. The high-density Euro-Block type terminal blocks plug into the numbered receptacles on the board. The two screws on TB2 are provided for the SCOM (chassis ground) connection, which should be as short a distance as possible.

Note SCOM, TB2, must be connected to chassis ground.

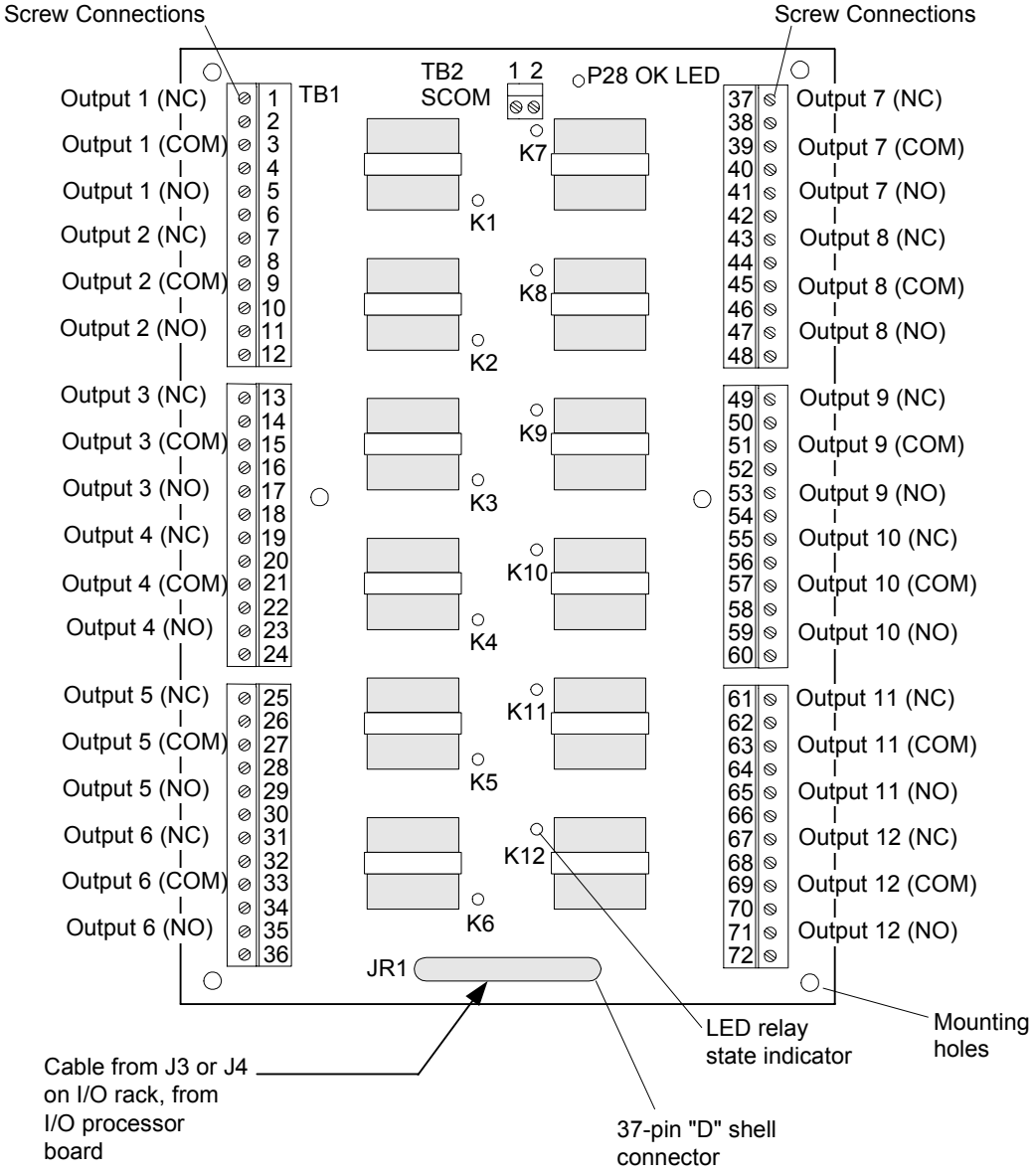

DRLY Wiring and Cabling

Operation

DRLY does not include solenoid source power. There is one set of dry contacts per relay, with two NO contacts in series. Unlike TRLY, there is no on-board suppression, and no relay state monitoring. The I/O board (VCCC, VCRC, or VTUR) provides the 28 V dc power for the relay coils, which is indicated with a green LED. DRLY has a yellow LED for each relay that indicates voltage across the coil. With an unconnected control cable, the relays default to a de-energized state.

Note Three relays on DRLY can be controlled by VTUR using the DTRT transition board. Six relays can be controlled if two DTURs are used.

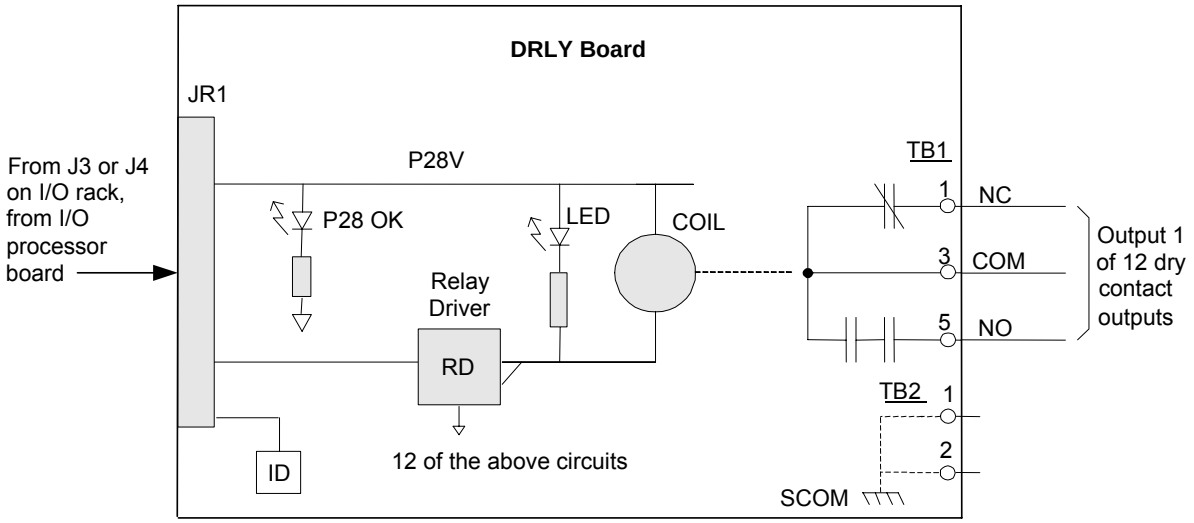

DRLY Board Circuits

DRLYH1A Specifications

Item	Specification			
Number of relay outputs and type	12 relays, nominal 24 V dc coil. Two-pole double throw with Form C contacts containing two NO and 2 NC contacts			
Relay contact rating	Resistive:		Inductive:	
	28 V dc:	10 A	28 V dc:	2 A, L/R = 7 ms, without suppression
	120 V ac:	10 A	120 V ac:	2 A, PF= 0.4, 10 A inrush, no suppression Motor load 1/3 Hp.
	240 V ac:	3 A	240 V ac:	2 A, PF= 0.4, 10 A inrush, no suppression Motor load ½ Hp.
	125 V dc:	0.5 A	125 V dc:	0.2 A, L/R = 7 ms without suppression
			125 V dc:	0.65 A, L/R = 150 ms, MOV suppression by others (with two contacts in series on the same relay)
Suppression	External suppression will be supplied by customer			
Relay response time	Operate: 15 ms typical			
	Release: 10 ms typical			
Fault detection in I/O board	The state of the P28 V dc is monitored using a green LED at the top of the board. Voltage across each relay coil is indicated with a yellow LED. There is no relay state monitoring in the VCCC or VCRC			
Physical				
Size	21.59 cm long x 20.57 cm wide (8.5 in x 8.1 in wide)			
Temperature	0 to 60ºC (32 to 140 ºF)			

DRLYH1B Specifications

Item	Specification
Number of relay outputs	12 relays, nominal 24 V dc coil
Relay type	Two-pole double throw with Form C contacts containing two NO and 2 NC contacts. UL listed, CSA certified, sealed to UL 1604
Relay contact rating (resistive load)	28 V dc: 2 A Max operating voltage: 250 V rms, 220 V dc
	125 V dc: 0.5 A Max operating current: 2 A dc, 1 A rms
	120 V ac: 1 A Max switching capacity: 125 VA, 60 W
	240 V ac: 0.5 A
Suppression	External suppression will be supplied by customer
Relay response time	Operate: 3 ms typical
	Release: 2 ms typical
Fault detection in I/O board	The state of the P28 V dc is monitored using a green LED at the top of the board
	Voltage across each relay coil is indicated with a yellow LED
	There is no relay state monitoring in the I/O board
Agency requirements	UL listed Class I, Division. 2 applications, CSA, and CE, also approvals listed in table above for TRLYH1A
Physical	
Size	21.59 cm long x 20.57 cm wide, (8.5 in x 8.1 in)
Temperature	0 to 75ºC (32 to 167 ºF)

Diagnostics

The board contains the following diagnostics; there is no relay state monitoring.

- The terminal board connector has an ID device that is interrogated by the I/O board. The connector ID is coded into a read-only chip containing the board serial number, board type, and revision number. When this chip is read by VCCC/VCRC or VTUR and a mismatch is encountered, a hardware incompatibility fault is created.
- The voltage across each relay coil is indicated with a yellow LED.
- The 28 V supply to the board is indicated with a green LED.

Configuration

There are no jumpers or hardware settings on the board.